International Shooting Sport Federation
Internationaler Schiess-Sportverband e.V.
Fédération Internationale de Tir Sportif
Federación Internacional de Tiro Deportivo

ISSF Headquarters • Bavariaring 21 • 80336 Munich, Germany
Phone: +49 89 544 355 0 • Fax: +49 89 544 355 44
Email: munich@issf-sports.org • www.issf-sports.org

OFFICIAL STATUTES RULES AND REGULATIONS

EDITION 2017 | Second Print 01/2018
Effective January 1, 2017
Copyright: ISSF

LS25/50 LASERSCORE®

The all-optical sensation!

NEW

The breakthrough is done!

Fully optical target for 25m and 50m pistol and small bore rifle

- Multiple optical precision measurement across the whole target plane
- Contact-free recording of the projectile with 160’000 measurements per second
- No rubber rolls
- No mechanical moving parts
- Extraordinary accuracy
- Weatherproof for outdoor shooting
- For any ammunition (single projectiles)
- Many configuration possibilities (e.g. reinforced front frame for steel jacket bullets)
- Integrated red/green light signal for 25m pistol
- Best price / performance ratio

SIUS

ISSF

Exclusive ISSF Results Provider

Wordwide the only system with ISSF-approval for all disciplines

SIUS AG
Im Langhag 1, 8307 Effretikon, Switzerland
Phone +41 52 354 60 60, Fax +41 52 354 60 66
www.sius.com, admin@sius.com

Table of Contents

Fees *6*

1. CONSTITUTION OF THE ISSF *8*

Annex 1
Guidelines to the "Constitution of the ISSF" *22*

2. TERMS OF REFERENCE *24*

3. ISSF GENERAL REGULATIONS *32*

Article 3.12.3.1, Annex „Q":
Special Regulations for the Participation in the Shooting Sport Events of the Olympic Games in Tokyo 2020. *58*

Article 3.12.3.2, Annex "D":
Athlete Declaration and ISSF ID Number Application Form *59*

Article 3.12.3.3, Annex "G":
General Procedures for Organizing Committees *64*

Article 3.12.3.4, Annex "W":
Application Procedures for ISSF World Championships and World Cups *65*

Article 3.12.3.5, Annex "CE":
ISSF Code of Ethics *71*

Article 3.12.3.6, Annex "R":
Procedures for Verification of World Records *83*

Article 3.12.3.7, Annex "P":
Rules for Filing and Deciding Protests *84*

Article 3.12.3.8, Annex "TA":
Guidelines for ISSF Academy (former ISSF Training Academy) *86*

Article 3.12.3.9, Annex "J":
Guidelines for Judges Licenses *88*

Article 3.12.2.9.1, Annex "S":
Guidelines for Shotgun Referees Licenses *104*

Article 3.12.3.10, Annex "A":
Guidelines for Public Affairs Activities *116*

Copyright: ISSF

Article 3.12.3.11, Annex "B":
Guidelines for Media Coverage, Broadcasting and Advertising *118*

Article 3.12.3.12, Annex "AC":
Athletes Committee *119*

4. ISSF ELIGIBILITY, ISSF COMMERCIAL RIGHTS AND ISSF SPONSORSHIP / ADVERTISING RULES *122*

5. ISSF ANTI-DOPING REGULATIONS *138*

6. GENERAL TECHNICAL RULES *208*

ANNEX – RULES FOR PAPER TARGET SCORING *360*

7. RIFLE RULES *378*

8. PISTOL RULES *408*

9. SHOTGUN RULES *446*

10. RUNNING TARGET RULES *546*

Separate Documents available at the ISSF Headquarters or for download on the ISSF website:
ISSF Corporate Identity and Design
ISSF Music Playlist
Commands and Announcements for Finals
Guidelines for Organizing ISSF Championships
Guidelines for the Organization of the Media Work
Guidelines for Accreditation, Finals Ranges and Victory Ceremonies
Checklists for Technical Delegates
ISSF World Cup Finals: How to qualify for the WCF?
Training Guidelines for ISSF Judges' Courses
Manual for ISSF Classification Officers
Training Manual Rifle for ISSF Range Officials & Judges
Training Manual Pistol for ISSF Range Officials & Judges
Training Manual Shotgun for ISSF Range Officials & Judges
Training Manual Running Target for ISSF Range Officials & Judges
Rifle Equipment Control Guide
Pistol Equipment Control Guide
Shotgun Equipment Control Guide
Equipment Control Instruments

EDITION 2017 | Second Print 01/2018
Copyright: ISSF

© International Shooting Sport Federation – ISSF –.

Munich, Germany.

All rights reserved.

December 2016.

Published by the International Shooting Sport Federation – ISSF – .

Printed in Germany.

Fees

Summary of fees for the International Shooting Sport Federation mentioned in any Rules of ISSF.

Competitions		
Entry Fee (except OG and YOG) (set by General Assembly)	Euro	170.00
Late Entry Fee (between 30 and 3 days before the Official Arrival Day providing that entry can be accepted by the OC) per start Euro 170.00 plus additional 50.00	Euro	220.00
The Organizing Committee must pay a fee to the ISSF for each entry within 30 days	Euro	5.00
Entry fee for each Official in any ISSF Championship (set by General Assembly)	Euro	50.00
Protest fee in competitions	Euro	50.00
Appeal fee in competitions	Euro	100.00
Training fee for shotgun trap / skeet	Euro	8.00
Training fee for shotgun double trap	Euro	10.00
Replacement of “Equipment Control Card”	Euro	10.00
Clothing Re-inspection fee if resubmitted for the second or subsequent test during the same championship (per item / per subsequent inspection)	Euro	20.00
The Organizing Committee must reimburse the travel costs for the official designated Jury Members to a maximum of	Euro	900.00
ISSF Administration Fees		
Issue of a new Judges License	Euro	20.00
Renewal of Judges License	Euro	15.00
Upgrade of Judges License	Euro	15.00
Issue of new Shotgun Referees License	Euro	20.00
Renewal of Shotgun Referees License	Euro	15.00
Issue for Athletes ID Numbers	Euro	10.00
Issue of Athletes ID Numbers Express application (issue within one week)	Euro	20.00
Participation Fee in ISSF Electronic Scoring Target Course (includes issue of License after Examination is passed)	Euro	70.00
Membership fee per federation (set by General Assembly)	Swiss Francs	1.500.00
ISSF Training Academy		
Training Academy participation fee for courses	Euro	1.250.00

All competition fees may be paid to the Organizing Committee in Euro or US Dollars by using the daily exchange rate. The Organizing Committee may ask for a preferenced currency for the payments.

All fees to be paid to ISSF may be paid in Euro, US Dollars or Swiss Francs by using the daily exchange rates.

The fees for items in the ISSF Shop are separate and available online.

EDITION 2017 | Second Print 01/2018
Copyright: ISSF

Copyright: ISSF

1. CONSTITUTION OF THE ISSF

EDITION 2017 | Second Print 01/2018
Copyright: ISSF

Chapters

1.1 PURPOSE *10*

1.2 ISSF HEADQUARTERS *10*

1.3 MEMBERSHIP *11*

1.4 HONORARY MEMBERSHIP *12*

1.5 ORGANIZATION AND ADMINISTRATION *13*

1.6 THE GENERAL ASSEMBLY *13*

1.7 THE ADMINISTRATIVE COUNCIL *14*

1.8 THE EXECUTIVE COMMITTEE *15*

1.9 THE OFFICERS *16*

1.10 THE TECHNICAL COMMITTEE *16*

1.11 THE SECTION COMMITTEES *17*

1.12 THE JUDGES COMMITTEE *17*

1.13 THE STATUTES AND ELIGIBILITY COMMITTEE *18*

1.14 THE MEDICAL COMMITTEE *18*

1.15 THE ATHLETES COMMITTEE *18*

1.16 COMMITTEES *19*

1.17 THE AUDITORS *19*

1.18 FINANCE *19*

1.19 CONTINENTAL CONFEDERATIONS *19*

1.20 ALTERATION OF THE CONSTITUTION *20*

1.21 LANGUAGES *20*

1.22 DISSOLUTION OF THE FEDERATION *21*

1.23 REGISTRATION OF THE FEDERATION ACCORDING TO ARTICLE 1.2.2 *21*

Copyright: ISSF

The International Shooting Sport Federation was founded in 1907 as the “Union Internationale des Federations et Associations Nationales de Tir,” was dissolved in 1915 and reorganized in 1921 under the name of “Union Internationale de Tir.” In 1939 activities were again suspended and the Union was reorganized in 1947 under the name: “International Shooting Union – UIT.” On 15th July 1998 the Union changed its name to the present name “International Shooting Sport Federation.” The Federation title in short form is “ISSF.” The International Shooting Sport Federation is formally recognized by the International Olympic Committee as the sole controlling body of International Amateur Shooting Sports at international and worldwide levels of competition.

1.1 PURPOSE

1.1.1 Promotes and guides the development of the shooting sports, without discrimination on political, racial or religious grounds and strengthens bonds of friendship between shooting associations of all nations.

1.1.2 Strengthens contacts and collaboration between other sport organizations and bodies.

1.1.3 For achievement of its purposes the Federation:

1.1.3.1 issues technical rules;

1.1.3.2 licenses judges;

1.1.3.3 co-operates with the Organizing Committee of the Olympic Games in carrying out the organization of the shooting events and, as delegated by the IOC, supervises and controls all technical arrangements;

1.1.3.4 organizes World Championships;

1.1.3.5 encourages and supervises other international championships;

1.1.3.6 develops and promotes methods and programs of instruction;

1.1.3.7 researches educational, scientific and medical principles;

1.1.3.8 publishes official bulletins;

1.1.3.9 awards distinctions to those who have contributed to the achievement of the Federation's purposes.

1.2 ISSF HEADQUARTERS

1.2.1 The headquarters must be in the country of the President and of the Secretary General. If they have different domiciles, the Administrative Council must decide the location.

EDITION 2017 | Second Print 01/2018
Copyright: ISSF

1.2.2 The Federation must be registered under the laws of the country in which the headquarters is located, subject to decision by the Administrative Council.

1.3 MEMBERSHIP

1.3.1 The Federation must be composed of those National Shooting Organizations, which are duly recognized by the Federation as the sole controlling body of shooting sports, and further recognized by and affiliated with their National Olympic Committee.

1.3.2 The National Olympic Committee of the country must be a full member of the International Olympic Committee.

1.3.3 Membership is open to one (1) Federation from each country. Countries with two (2) member federations recognized prior to 1989 may retain dual membership, but no new applications for membership may be accepted from more than one (1) federation per country;

1.3.4 Applicants must submit:

1.3.4.1 details on their foundation and organization;

1.3.4.2 a copy of their Constitution;

1.3.4.3 certification of recognition and affiliation as required in 1.3.1 and 1.3.2;

1.3.4.4 a copy of their Anti-Doping Regulations which must be in substantial conformity with the ISSF Anti-Doping Regulations and the World Anti-Doping Code.

1.3.5 Membership is decided by majority vote of the Administrative Council and new members are reported to the General Assembly.

1.3.6 The applicant may submit a denied application directly to the General Assembly.

1.3.7 Members must not belong to and must not participate in championships of other Continental or International Shooting Associations which include events defined in the ISSF Regulations, except when authorized by the ISSF.

1.3.8 Annual Membership fees are due on January 1st and are to be paid within 30 days.

1.3.9 Membership may be withdrawn, effective at the end of the current year, on three (3) months' notice to the Secretary General.

1.3.10 A member with limited financial resources may apply to the Executive Committee for a membership fee reduction.

1.3.11 A member is suspended from its rights by a delay of payments later than March 31st of the current year.

Copyright: ISSF

1.3.12 A member may be excluded by a default of two (2) years fees.

1.3.13 Payment of past due fees and a re-affiliation fee of Swiss Francs (CHF) 200 will reinstate membership.

1.3.14 A member may apply for special consideration of its membership, because of special circumstances.

1.3.15 Suspension and Expulsion

1.3.15.1 A member may be suspended if, in the opinion of the Administrative Council, the ISSF is better able to achieve any of its purposes by the suspension of a member;

1.3.15.2 A member may be expelled from the Federation for an action contrary to the Constitution or the General Regulations.

1.3.16 Special Arbitration agreement between the International Shooting Sport Federation - ISSF - and its members.

1.3.16.1 Any dispute arising from the present Statutes and Regulations of the ISSF which cannot be settled amicably, must be settled finally by a tribunal composed in accordance with the Statute and Regulations of the Court of Arbitration for Sport to the exclusion of any recourse to ordinary courts. The parties undertake to comply with the said Statute and Regulations, and to accept in good faith the award rendered and in no way hinder its execution.

1.3.16.2 Disputes between the ISSF and one (1) or several of its members which are not settled finally by a decision by a body of the ISSF, may be submitted for arbitration by one (1) or other of the parties to the Court of Arbitration for Sport (CAS) in Lausanne. Any decision taken by the said Court must be without appeal and binding on the parties concerned.

1.3.17 The ISSF **Code of Ethics** must be followed by its members, Continental Confederations, teams, officials, and athletes.

1.3.18 The ISSF **Anti-Doping Regulations** must be followed by its members, Continental Confederations, teams, officials, and athletes.

1.4 HONORARY MEMBERSHIP

1.4.1 Individuals may be awarded honorary membership as the Federation's highest honor. Formal proposal and election by the General Assembly is required.

1.4.2 Honorary members may attend all meetings of the Federation, with voice but without vote.

EDITION 2017 | Second Print 01/2018
Copyright: ISSF

1.5 ORGANIZATION AND ADMINISTRATION

1.5.1 The Federation must conduct its work through:

1.5.1.1 the General Assembly;

1.5.1.2 the Administrative Council;

1.5.1.3 the Executive Committee;

1.5.1.4 the Officers;

1.5.1.5 the Committees.

1.5.2 The General Assembly, Administrative Council or Executive Committee may form temporary Committees.

1.5.3 A candidate for any position must be a current member of, and have the support of a Federation.

1.6 THE GENERAL ASSEMBLY

1.6.1 The General Assembly consists of delegates representing the members.

1.6.2 The General Assembly convenes every two (2) years at the location of the World Championships (Elections Congress) and Olympic Games or at a location chosen by the Executive Committee after a unanimous vote.

1.6.3 An Extraordinary General Assembly must be convened by a decision of the General Assembly, or of the Administrative Council, or on written request by at least 25 members.

1.6.4 Proposals for the agenda by the members must be received three (3) months in advance.

1.6.5 The agenda and the documents must be mailed to all members and the Administrative Council two (2) months in advance.

1.6.6 Decisions by the General Assembly are restricted to items on the agenda. Items, excluding alterations of the Constitution or of the General Regulations, may be added to the agenda by the Administrative Council or upon approval by a 75 % majority vote in the General Assembly.

1.6.7 Functions of the General Assembly:

1.6.7.1 elections of the officers, members of the Administrative Council, Chairmen of the Committees, auditors and Honorary members;

1.6.7.2 election of temporary Committees, such as Minutes or Election Committees;

Copyright: ISSF

1.6.7.3 approval of the report of the auditors and other reports;

1.6.7.4 choice of the countries to organize the World Championships;

1.6.7.5 decisions on appeals regarding membership status;

1.6.7.6 determination of membership fees;

1.6.7.7 revision of the Constitution and of the General Regulations;

1.6.7.8 dissolution of the Federation.

1.6.8 One (1) Federation representing all shooting sports will have two (2) votes and may be represented by one (1) or two (2) delegates.

1.6.9 Two (2) Federations representing one (1) country will each have one (1) vote and one (1) delegate.

1.6.10 Members may be represented by proxy, given in writing. One (1) member may not represent more than one (1) other member. Members with one (1) vote may only hold one (1) proxy vote. Members with two (2) votes may hold two (2) proxy votes.

1.6.11 The Members of the Administrative Council are ex-officio members of the General Assembly, with voice but without vote.

1.6.12 A quorum in the General Assembly is 25 % of the members (including proxies).

1.6.13 Balloting

1.6.13.1 All decisions are made by open vote and must require a simple majority, except when secret vote is requested by 20 % or more of members represented. Electronic voting may be used if agreed by a simple majority by open vote.

1.6.13.2 Elections must be secret with the exception of elections which may be conducted by acclamation when there is only one (1) candidate, or as many candidates as there are vacancies, and if no objection is raised by any member.

1.6.13.3 Only ballots that contain votes for as many candidates, or fewer, as there are vacancies must be valid.

1.7 THE ADMINISTRATIVE COUNCIL

1.7.1 Consists of Officers, Chairmen of all Committees, except temporary Committees, the President or his Nominee from each Continental Confederation and 15 additional members elected by the General Assembly for a four (4) year term.

1.7.2 Functions of the Administrative Council:

1.7.2.1 admission, suspension and exclusion of members;

EDITION 2017 | Second Print 01/2018
Copyright: ISSF

1.7.2.2 election of five (5) of its 15 members who have been elected by the General Assembly to the Executive Committee for a four (4) year term;

1.7.2.3 election of Committee members for a period of 2 years;

1.7.2.4 examination of proposals to the General Assembly;

1.7.2.5 approval of technical rules for shooting events and of rules for international badge-shooting competitions or similar programs;

1.7.2.6 award of distinctions for outstanding service;

1.7.2.7 appoints a replacement for any Officer, Administrative Council member or Committee member who resigns, becomes unable to fulfill his duties for other reasons, is removed, or if a vacancy occurs;

1.7.2.8 ensures that the purpose of the Federation is promoted and decides on the Headquarters and registration (see 1.2).

1.7.3 A quorum is 50 % of the members.

1.7.4 Proxy voting will not be permitted.

1.7.5 All decisions must be taken by majority vote of the members present and by open ballot, except for the elections. For urgent matters, decisions can be taken without a meeting, by postal vote; but a majority of 75 % is required.

1.7.6 Meets at least once per year.

1.8 THE EXECUTIVE COMMITTEE

1.8.1 Consists of the Officers, the Chairman of the Technical Committee, and five (5) other members who must be elected by the Administrative Council from its 15 members, elected by the General Assembly for a four (4) year term.

1.8.2 Functions of the Committee:

1.8.2.1 ensures that the decisions of the General Assembly and the Administrative Council are put into effect;

1.8.2.2 supervises and co-ordinates administrative services and functions;

1.8.2.3 establishes guidelines and procedures for the ISSF bodies and decides on the Annexes to the ISSF General Regulations;

1.8.2.4 acts on behalf of the Administrative Council in urgent matters;

1.8.2.5 decides on the country to organize the World Championships in case of a default by the selected host;

Copyright: ISSF

1.8.2.6 designates the Delegates or Representatives, and Jury Members for all Championships under direction of the ISSF;

1.8.2.7 acts on matters not assigned to other Committees;

1.8.2.8 decides on the design and use of ISSF emblems;

1.8.2.9 after agreement of the ISSF President with the IOC President on the number of quotas for the Olympic Games, the Executive Committee establishes and supervises the "Special Regulations for the Participation in the Shooting Events of the Olympic Games".

1.8.3 A quorum is eight (8) members.

1.8.4 Meets at least twice per year.

1.9 THE OFFICERS

1.9.1 The Officers of the Federation must consist of:

1.9.1.1 the President;

1.9.1.2 the Secretary General who is also the Treasurer;

1.9.1.3 four (4) Vice-Presidents.

1.9.2 The President, or in his absence the Secretary General or one (1) Vice-President, must preside over the General Assembly, the Administrative Council and the Executive Committee.

1.9.3 The Officers are elected by the General Assembly for a four (4) year term.

1.9.4 The Officers may attend the meetings of all Committees, except the Election Committee, with voice but without vote.

1.9.5 The Federation is legally represented by the President or the Secretary General.

1.10 THE TECHNICAL COMMITTEE

1.10.1 Consists of a Chairman and five (5) Members.

1.10.2 Functions of the Committee:

1.10.2.1 assists Section Committees in the development of shooting rules and the sport of shooting;

1.10.2.2 co-ordinates rules for different shooting events;

1.10.2.3 co-ordinates proposals from the Section Committees;

EDITION 2017 | Second Print 01/2018
Copyright: ISSF

1.10.2.4 nominates to the Executive Committee Delegates and Representatives for all competitions under the direction of the ISSF;

1.10.2.5 evaluates and assists in range design, range equipment and operational procedures for all competitions under the direction of the ISSF;

1.10.2.6 verifies and approves world records.

1.10.3 Reports to the Administrative Council or the Executive Committee.

1.10.4 Meets at least once per year.

1.11 THE SECTION COMMITTEES

1.11.1 Committees will be elected for the following sections:

1.11.1.1 Rifle shooting;

1.11.1.2 Pistol shooting;

1.11.1.3 Shotgun shooting;

1.11.1.4 Running Target shooting.

1.11.2 Each Section Committee consists of a Chairman and seven (7) Members.

1.11.3 Each Section Committee must be responsible for the formulation of the shooting rules, and must consider all technical questions relating to organization, arms and regulations in their field, including rule interpretation.

1.11.4 Each Section Committee reports to the Executive Committee and the Administrative Council.

1.12 THE JUDGES COMMITTEE

1.12.1 Consists of a Chairman and seven (7) Members.

1.12.2 Functions of the Committee:

1.12.2.1 ensures uniform application of the shooting rules;

1.12.2.2 provides guidelines for international judges;

1.12.2.3 prepares and conducts courses for judges and Jury Members;

1.12.2.4 approves applications for judges' licenses;

1.12.2.5 nominates to the Executive Committee Juries for Championships or Games.

1.12.3 Reports to the Executive Committee and the Administrative Council.

Copyright: ISSF

1.12.4 Meets at least once per year.

1.13 THE STATUTES AND ELIGIBILITY COMMITTEE

1.13.1 Consists of a Chairman and seven (7) Members.

1.13.2 Functions of the Committee:

1.13.2.1 studies the Constitution and the General Regulations;

1.13.2.2 considers the changes or additions proposed by others;

1.13.2.3 studies rules concerning eligibility for Championships and Olympic Games;

1.13.2.4 considers individual eligibility matters.

1.13.3 Reports to the Executive Committee and the Administrative Council.

1.14 THE MEDICAL COMMITTEE

1.14.1 Consists of a Chairman and Members.

1.14.2 Functions of the Committee:

1.14.2.1 examines medical questions relating to shooting and submits guidelines and specified proposals;

1.14.2.2 supports the organization and conduct of the Anti-Doping Control according to rules approved by the Administrative Council;

1.14.2.3 promotes the exchange of experience by publications and bulletins and by organizing special events.

1.14.3 Reports to the Executive Committee and the Administrative Council.

1.15 THE ATHLETES COMMITTEE

1.15.1 Consists of a Chairman and six (6) Members.

1.15.2 Functions of the Committee:

1.15.2.1 To gather information and opinions from athletes on their needs and problems with regard to the Olympic Games and major ISSF international championships.

1.15.2.2 To voice opinions and make recommendations on these topics and forward them to the relevant bodies of the ISSF.

1.15.2.3 To establish contact and coordinate activities with the Athletes Committees of other international federations.

EDITION 2017 | Second Print 01/2018
Copyright: ISSF

1.15.2.4 To participate in working groups, to ensure the best possible conditions for the training, accommodation and living conditions for the athletes as well as for the conduct of the competitions at the major international championships.

1.15.2.5 To support the fight against drugs and doping.

1.15.2.6 To establish a direct link with the athletes within the ISSF.

1.16 COMMITTEES

1.16.1 Decisions in all ISSF Committees are taken by a majority of the votes cast.

1.16.1.1 The Chairman and the Members have one (1) vote each. Abstentions and blank or spoilt votes are declared invalid. Voting by proxy is not allowed. The vote is held by secret ballot if the Chairman so decides, or at the request of one (1) attending member. In the event of a tie, the Chairman of the meeting also has the casting vote.

1.16.2 In all Committees of the ISSF, a minimum of one (1) member should be female. If no female candidate is nominated, or if a female candidate is not elected, one (1) position on the committee must be declared vacant until the position can be filled in accordance with Article 1.7.2.7.

1.17 THE AUDITORS

1.17.1 The Auditors must examine the accounts and financial transactions and give a written report to the General Assembly.

1.18 FINANCE

1.18.1 The financial year runs from January 1st to December 31st.

1.18.2 In each meeting of the Administrative Council the Secretary General reports on the financial status.

1.19 CONTINENTAL CONFEDERATIONS

1.19.1 The ISSF recognizes the importance of Continental Confederations for the promotion and organization of shooting, and supports their formation and work.

1.19.2 The National Shooting Federations of a continent, which are ISSF members, may form a Continental Shooting Confederation or Federation.

1.19.3 The recognition of Continental Confederations and approval of their Statutes are executed by the Administrative Council. Their Constitution and Regulations must be in accordance with the Constitution and Regulations of the ISSF.

Copyright: ISSF

1.19.4 The purposes of Continental Confederations must cover:

1.19.4.1 promotion and further the development of shooting sport within the Continent, in accordance with the Rules and Constitution of ISSF;

1.19.4.2 promotion of training courses and competitions within the continent;

1.19.4.3 organization of Continental Championships on a regular basis;

1.19.4.4 representation in the ISSF Administrative Council (Article 1.7.1).

1.19.5 The Administrative Council may form a special Ad Hoc Committee, chaired by a Vice-President, to assist in the formation of new Continental Confederations organizing Continental Championships.

1.19.6 Continental Confederations must submit reports on their activities to each meeting of the Administrative Council and General Assembly.

1.20 ALTERATION OF THE CONSTITUTION

1.20.1 Proposals must be received by the Secretary General's office at least three (3) months before the General Assembly and distributed to the members and the Administrative Council, in accordance with Article 1.6.5.

1.20.2 A two thirds majority in the General Assembly, at which at least 22 % of the members are represented, must approve all changes.

1.20.3 Changes of the Constitution become effective immediately upon approval, except that previously established terms of office must be completed.

1.21 LANGUAGES

1.21.1 English is the permanent official language. The Constitution and all regulations, rules and legal or official communications must be published in the English language. The resolution of disputes must be conducted in the English language.

1.21.2 English, French, Spanish, German, Russian and Arabic are recognized languages. Simultaneous translation should be provided at General Assemblies.

1.21.3 The Executive Committee may permit the use of other languages in Administrative Council meetings and General Assemblies.

1.21.4 In Continental and World Championships the language of the host country may be used in the program, in addition to English.

EDITION 2017 | Second Print 01/2018
Copyright: ISSF

1.22 DISSOLUTION OF THE FEDERATION

1.22.1 A demand for dissolution of the Federation must be received six (6) months before the General Assembly and mailed to all members and the Administrative Council five (5) months in advance.

1.22.2 A three quarters majority in the General Assembly at which at least 25 % of the members are represented must approve the dissolution of the Federation.

1.23 REGISTRATION OF THE FEDERATION ACCORDING TO ARTICLE 1.2.2

1.23.1 The Federation according to the decision by the Administrative Council has its Headquarters in Munich, Germany and must be legally registered under the name: "International Shooting Sport Federation, registered society (ISSF)" (Internationaler Schiess-Sportverband, eingetragener Verein, ISSF), and must be entered into the register of the proper court.

1.23.2 The Federation observes, exclusively and without reservation, beneficial purposes according to the section "Tax aid and abet" of the Tax laws of Germany. It acts selflessly and observes primarily non-profit making purposes.

1.23.3 Funds of the Federation may only be used for constitutional purposes. Members receive no financial gain from the Federation. No person must be privileged by expenditures which are contrary to the purposes of the Federation or by disproportionately high compensations.

1.23.4 In case of dissolution of the Federation or suspension of the tax exception by the German Government, any remaining assets must be given to the National Olympic Committee with the injunction for exclusive use for beneficial purposes for the international shooting sport.

1.23.5 Alterations to the Constitution and dissolution of the Federation must be reported to the Finance Office of the place of registry.

This Constitution was approved by the Extraordinary General Assembly of the UIT on July 27th, 1980 in Moscow, and replaced the "Constitution of the UIT, Edition 1978". This edition includes amendments and corrections approved by the General Assemblies on July 15th, 1998 in Barcelona, ESP, on March 21st, 2000 in Sydney, AUS, on April 18th, 2004 in Athens, GRE and on April 10th, 2008 in Beijing, CHN.Constitution Annex 1

Copyright: ISSF

Annex 1
Guidelines to the “Constitution of the ISSF”

To Article 1.3.3

The ISSF accepts the sole governing body of all amateur shooting sport in each country. If several Federations govern different sections of the shooting sport, the ISSF recommends their unification into one (1) central organization.

To Article 1.3.4.1

Applicants are required to submit a short history of their Federation with details of its foundation and organization, explaining its structure, the sections of shooting sport in which they participate; and giving information of the approximate number of members, affiliated clubs or organizations and the names of their officers.

To Article 1.3.10

A Federation representing all shooting activity in one (1) country pays the full membership fee. Two 82) Federations of the same country will each pay half of the full fee. The Administrative Council will decide the fee for new members at the time of their admission. Any member may apply for the reduction of the membership fee according to Article 1.3.10 of the Constitution. Applications must be submitted before December 31st of the current year. A financial statement showing the principal source of income and revenue from membership fees, together with information on the number of members and clubs of affiliated organizations, is to be submitted with the application.

To Article 1.3.15

Before the Administrative Council takes action the member concerned shall be given the opportunity to present their case. A member may be suspended if, in the opinion of the Administrative Council, the ISSF is better able to achieve any of its purposes by the suspension of the member.

To Article 1.4.2

The Honorary Members shall be invited to the General Assemblies and World Championships.

To Article 1.5.1

Decisions:

Unless any other arrangements are expressly made, decisions will become effective immediately after they are decided.

EDITION 2017 | Second Print 01/2018
Copyright: ISSF

To Article 1.5.3

A candidate nominated for election or re-election to any position in the ISSF, must be a current member of, and have the support of, his national Federation or be a current member and have the support of another Federation. Members of the Section Committees must be a holder of the appropriate judge's license. Any Federation proposing a candidate for one of the ISSF Committees is obliged to assist him with the costs of travel, accommodations and meals in connection with his attendance at Committee meetings. All nominations must be received by the Secretary General two (2) months before the election. If, at the time of the election, there are fewer candidates than vacancies for any position, additional nominations may be submitted at the General Assembly. Member Federations that nominate new candidates must submit a statement of qualifications for the position for each candidate. A candidate for any position in the ISSF is not required to hold a special position in his own Federation. Every person elected to a position in the ISSF serves solely in the interests of, and is responsible to the ISSF.

To Article 1.6.4

A Review Committee that is appointed by the Executive Committee prior to the General Assembly shall examine the proposals of the members. The Review Committee reports to the General Assembly.

To Article 1.6.5

Notice of a General Assembly together, with the agenda and the documents, shall be given by the President and the Secretary General by letter, sent at least two (2) months in advance.

To Article 1.6.6

Minutes shall be recorded of the business transacted in the General Assembly and shall be signed by the presiding officer.

To Article 1.7.2.4

Examination of the proposals to the General Assembly by the Administrative Council includes the right to make recommendations concerning these proposals.

To Article 1.7.2.7

Before the Administrative Council takes action the person/s concerned shall be given the opportunity to present their case.

To Article 1.9.5

The legal representation is executed by the President and the Secretary General each of whom has an individual right of representation.

To Article 1.10.2.2 and 1.10.2.3

The authority to co-ordinate includes the authority to review proposals.

Copyright: ISSF

2. TERMS OF REFERENCE

EDITION 2017 | Second Print 01/2018
Copyright: ISSF

Chapters

2.1 STATEMENT OF PRINCIPLE *26*

2.2 DESCRIPTION OF FUNCTIONS *26*

2.3 RULES FOR MEETINGS *28*

2.4 RULES FOR COOPERATION BETWEEN SECTION COMMITTEES AND THE TECHNICAL COMMITTEE *29*

2.5 ISSF HEADQUARTERS *30*

Copyright: ISSF

2.1 STATEMENT OF PRINCIPLE

2.1.1 Every person elected to a position in any ISSF body serves solely in the interest of, and is responsible to the Federation. In performing his responsibilities he must ensure that all provisions of the Constitution, General Regulations and other rules of the ISSF will therefore be given priority in all decisions.

2.1.2 All persons elected or appointed to the ISSF serve on an honorary basis and without salary.

2.1.3 By accepting election or appointment everyone agrees to devote the time necessary to accomplish the duties required by their position.

2.2 DESCRIPTION OF FUNCTIONS

2.2.1 President

Objectives

Successful leadership and direction of the ISSF ensuring a balanced promotion of all sections and activities of the amateur shooting sport and also observing the needs of tradition and development.

Principal Duties and Responsibilities

Convenes and presides over Assemblies and meetings according to the Constitution.

Supervises the execution of decisions; activities of ISSF bodies; ensures the proper observance of the Constitution, General Regulations and other rules.

Ensures that the ISSF obligations to Member Federations, Continental Confederations, Organizing Committees and International or National Sport Organizations are fulfilled. Represents the ISSF in legal matters in conjunction with the Secretary General.

Acts on behalf of, or represents, the ISSF, as circumstances require.

Authority

Acts as Chairman of the General Assembly, the Administrative Council and the Executive Committee.

Acts in urgent cases on matters not provided for in the Constitution or General Regulations. Such actions, however, require subsequent approval by the Administrative Council or Executive Committee.

EDITION 2017 | Second Print 01/2018
Copyright: ISSF

2.2.2 Vice-Presidents

Objectives

Support and assist the President in leading and directing the ISSF.

Principal Duties and Responsibilities

As delegated by the President, convene and preside at ISSF meetings in the President's absence or at his request.

Carry out duties assigned by the Administrative Council or Executive Committee or as requested by the President.

Perform special assignments or assist and supervise specific parts of ISSF activities on a permanent basis on request of the Executive Committee or the President.

Authority

Act on behalf of the President in his absence or on his request.

2.2.3 Secretary General

Objectives

Operates the Headquarters for efficient conduct of all ISSF business.

Principal Duties and Responsibilities

Represents the ISSF in legal matters together with the President.

Acts as ISSF Treasurer.

Represents the President at his request.

Performs duties defined in description of Headquarters operations.

Authority

Full authority over all ISSF employees. For further details see description of Headquarters operations.

Copyright: ISSF

2.2.4 Members of the Committees

Objectives

Assistance, support and advice to the Administrative Council and the Executive Committee in all matters assigned to them.

Principal Duties and Responsibilities

All Committees of the ISSF shall deal with all matters within their field of interest as an advisory body and shall be responsible for the technical and other activities assigned to them by the Constitution or the Administrative Council and the Executive Committee.

All members of the Committees act and vote as independent members and not as representatives of their National Federations.

Each Chairman must designate his substitute in the event of his absence, and a Recording Secretary for each meeting.

Authority

Each Chairman represents his Committee in the Administrative Council. The Committee Chairman may act on behalf of his Committee in urgent cases, and on request of the President, Secretary General, the Administrative Council, or the Executive Committee. He must inform his Committee members of any action taken.

2.3 RULES FOR MEETINGS

2.3.1 Frequency

The ISSF Committees meet as stated in the Constitution, on request of the President, Secretary General, the Administrative Council, or the Executive Committee, or on request by a Committee Chairman.

If possible meetings shall be scheduled in conjunction with World Championships or other important shooting sport events.

2.3.2 Notices

Notices for Committee meetings will be sent by the Secretary General. For this purpose the Chairman must submit the agenda, documents and any other information for the meeting early enough to permit mailing of the notices at least two (2) months in advance of the meeting date.

EDITION 2017 | Second Print 01/2018
Copyright: ISSF

2.3.3 Recording Secretary

The Chairman must appoint a Recording Secretary for each meeting. The Recording Secretary will prepare minutes, which must be signed by the Chairman after agreement by the members who attended. The minutes must be submitted to the Secretary General within two (2) months of the meeting.

2.3.4 Order of Business

2.3.4.1 Appointment of Recording Secretary.

2.3.4.2 Roll-call of Members attending.

2.3.4.3 Reading and approval of the minutes of the previous meeting.

2.3.4.4 Review of Actions and Outstanding business from these minutes.

2.3.4.5 New business on the agenda.

2.3.4.6 Recommended place, date and time of the next meeting.

2.3.5 Quorum and Voting Procedure

A quorum in Committee meetings is 50 % of the members (including the Chairman), unless otherwise stated in the Constitution. Proxy voting is not permitted. Each member of the Committee has one (1) vote. The Chairman in the case of a tie, shall cast the deciding vote. All decisions are taken by open ballot, except when a secret vote is requested by 50 % or more of the members present. A postal vote may be conducted in the interval between meetings. When a postal vote is required, the Chairman must send to each member (and a copy to the ISSF Headquarters) a clear statement of the question to be voted upon, with a request that each member must return his vote before a stated date. Within eight (8) days of closing the postal vote, the Chairman must send a report and the result of the vote to the ISSF Headquarters. A non-response will be taken to signify an affirmative vote.

2.4 RULES FOR COOPERATION BETWEEN SECTION COMMITTEES AND THE TECHNICAL COMMITTEE

Whenever a Section Committee deals with matters concerning the formulation of shooting regulations or rule interpretation (Art. 1.11.3 of the Constitution), the Chairman must submit a report and copy of the documents to the Chairman of the Technical Committee within 10 days after the meeting (Art. 1.10.2.1, 1.10.2.2 and 1.10.2.3 of the Constitution). If the Technical Committee considers that a re-examination of the proposal is necessary, the Chairman of the Technical Committee will inform the Chairman of the Section Committee concerned as soon as possible, however, not later than two (2) months after receipt of the proposals.

Copyright: ISSF

2.5 ISSF HEADQUARTERS

2.5.1 The ISSF Headquarters, under direction of the Secretary General, conducts the business of the ISSF. Correspondence, preparation of circular letters and reports, preparation and mailing of summons to meetings are, among others, the duties of the Headquarters.

2.5.2 All work, communications and decisions arising from the Constitution or action by the General Assembly, the Administrative Council and the Executive Committee is carried out as a matter of course by the Headquarters under supervision of the Executive Committee. The Secretary General is directly responsible to the President for operation of the Headquarters.

2.5.3 All affairs related to finances such as accounting and ISSF budget preparation are performed by the ISSF Headquarters. The President of the ISSF is kept currently informed as to the state of affairs and must give his approval on all important matters. A short financial report is presented at each meeting to the Administrative Council and the Executive Committee.

2.5.4 The President, Administrative Council Members and Executive Committee Members will all receive a copy of documents concerning any matter of special importance.

2.5.5 The Secretary General is the employer of all who work in the Headquarters of the ISSF. This will be in conformity with the labor laws in effect at the headquarters of the ISSF, with regard to all related matters. The Executive Committee and the Administrative Council will be informed of all current important personnel matters at their next meeting.

2.5.6 The Secretary General will work independently, within the limits of his authority. In his capacity as Secretary General, and as a member of the Executive Committee, he has the right and duty at all times to coordinate the work of the various ISSF bodies. He is responsible for covering the financial obligations of the ISSF while remaining within the budget. The direction of the transactions and entering into contracts with other organizations, sporting or otherwise, commercial firms, etc. are within the usual authority of the Secretary General; however the President and the ISSF bodies concerned must be made aware of all such transactions or contracts.

EDITION 2017 | Second Print 01/2018
Copyright: ISSF

Copyright: ISSF

International Shooting Sport Federation
Internationaler Schiess-Sportverband e.V.
Fédération Internationale de Tir Sportif
Federación Internacional de Tiro Deportivo

3. ISSF GENERAL REGULATIONS

WITH CHANGES APPROVED BY THE IOC, AND 25 JUNE 2017 EGA

EDITION 2017 | Second Print 01/2018
Copyright: ISSF

Chapters

3.1 PURPOSE *34*

3.2 ISSF SUPERVISED COMPETITIONS / CHAMPIONSHIPS (ISSF CHAMPIONSHIPS) *34*

3.3 SHOOTING SPORT EVENTS *35*

3.4 ADMINISTRATION AND CONTROL OF ISSF CHAMPIONSHIPS *40*

3.5 RANGES AND OTHER FACILITIES *42*

3.6 ENTRY AND PARTICIPATION *43*

3.7 COMPETITION PROCEDURES *46*

3.8 PROTOCOL *49*

3.9 WORLD RECORDS *50*

3.10 MEDIA RELATIONS *50*

3.11 GENERAL *51*

3.12 ANNEXES *51*

3.13 APPROVAL *53*

3.14 INDEX *54*

Copyright: ISSF

3.1 PURPOSE

3.1.1 The General Regulations of the International Shooting Sport Federation (ISSF) govern shooting sport competition in the Olympic Games, World Championships, World Cups, Continental Championships and Continental Games.

3.1.2 These Regulations should be used to govern other international shooting sport competitions, which are conducted according to ISSF Rules.

3.2 ISSF SUPERVISED COMPETITIONS / CHAMPIONSHIPS (ISSF CHAMPIONSHIPS)

3.2.1 The ISSF supervises shooting sport events in the Olympic Games, World Championships, World Cups, Continental Championships and Continental Games.

3.2.2 World Championships must be organized every fourth years, two (2) years after each Olympic Games. Continental Championships should be organized every two (2) years following the Olympic Games and the World Championships. World Championships for Shotgun Shooting may also be organized in the years following World Championships and Olympic Games.

3.2.3 World Championships must be organized by Member Federations chosen by the ISSF General Assembly at least four (4) years in advance.

3.2.4 World Cups are organized by Member Federations that are chosen by the Executive Committee.

3.2.5 Continental Confederations choose the federations that organize Continental Championships.

3.2.6 A Member Federation desiring to organize a World Championship must submit its proposal to the Secretary General at least one (1) month in advance of the General Assembly where the organizing federation will be chosen. The proposal should include:

3.2.6.1 an official statement from the appropriate government agency and/or National Olympic Committee, indicating the support to be given to the organization of the Championships;

3.2.6.2 a statement that all the requirements of the ISSF Constitution will be observed;

3.2.6.3 a statement that the organizing federation will invite all ISSF Member Federations;

3.2.6.4 a description of the existing or proposed shooting ranges and other necessary facilities that must meet ISSF requirements;

3.2.6.5 information regarding the proposed organization, cost of food and housing, transportation to and from ranges and the availability of travel concessions;

EDITION 2017 | Second Print 01/2018
Copyright: ISSF

3.2.6.6 a statement listing the events the Federation proposes to include in the program.

3.2.7 If no application is received, or if the Federation selected to organize the World Championships withdraws, the Executive Committee must select another Federation to organize the World Championships. Or, if no single Federation can be found, select neighboring Federations that offer to organize the World Championships in separate groups of events.

3.2.8 Withdrawal is only possible with the approval of the Executive Committee. Unapproved withdrawal is subject to the assessment of a fine, or the suspension of membership or the suspension of participation at ISSF Championships for a certain time to be decided by the Administrative Council.

3.3 SHOOTING SPORT EVENTS

3.3.1 Events recognized by the ISSF are:

3.3.1.1 Men's Events:

Name of Event
10m Air Rifle Men
50m Rifle 3 Positions Men
50m Rifle Prone Men
300m Rifle 3 Positions Men
300m Rifle Prone Men
300m Standard Rifle Men
10m Air Pistol Men
25m Rapid Fire Pistol Men
25m Center Fire Pistol Men
25m Standard Pistol Men
50m Pistol Men
Trap Men
Double Trap Men
Skeet Men
10m Running Target Men
10m Running Target Mixed Men
50m Running Target Men
50m Running Target Mixed Men

Copyright: ISSF

3.3.1.2 Women's Events:

Name of Event
10m Air Rifle Women
50m Rifle 3 Positions Women
50m Rifle Prone Women
300m Rifle 3 Positions Women
300m Rifle Prone Women
10m Air Pistol Women
25m Pistol Women
Trap Women
Double Trap Women
Skeet Women
10m Running Target Women
10m Running Target Mixed Women

3.3.1.3 Mixed Team Events:

Mixed Team events are for teams with two members, one man and one woman.

3.3.1.4 Men Junior Events:

Name of Event
10m Air Rifle Men Junior
50m Rifle 3 Positions Men Junior
50m Rifle Prone Men Junior
10m Air Pistol Junior
50m Pistol Men Men Junior
25m Rapid Fire Pistol Men Junior
25m Pistol Men Junior
25m Standard Pistol Men Junior
Trap Men Junior
Double Trap Men Junior
Skeet Men Junior
10m Running Target Men Junior
10m Running Target Mixed Men Junior
50m Running Target Men Junior
50m Running Target Mixed Men Junior

EDITION 2017 | Second Print 01/2018
Copyright: ISSF

3.3.1.5 Women Junior Events:

Name of event
10m Air Rifle Women Junior
50m Rifle 3 Positions Women Junior
50m Rifle Prone Women Junior
10m Air Pistol Women Junior
25m Pistol Women Junior
Trap Women Junior
Double Trap Junior
Skeet Women Junior
10m Running Target Women Junior
10m Running Target Mixed Women Junior

3.3.1.6 Mixed Team Junior Events:

Mixed Team Junior events are for teams with two members, one man junior and one woman junior.

3.3.1.7 Team events (for teams of three (3) members only) are recognized for all ISSF recognized individual events. Only full teams of three (3) athletes will be ranked in the team results list.

3.3.2 Olympic Events recognized by the IOC:

Olympic Events for men, women and mixed teams are conducted in accordance with Rifle, Pistol and Shotgun technical rules approved by the Administrative Council in accordance with 1.7.2.5 of the ISSF Constitution. Each Olympic event has a “Qualification” round and a “Final.”

3.3.2.1 Men’s Individual Events:

Name of Event
50m Rifle 3 Positions Men
10m Air Rifle Men
25m Rapid Fire Pistol Men
10m Air Pistol Men
Trap Men
Skeet Men

Copyright: ISSF

3.3.2.2 Women's Individual Events:

Name of Event
50m Rifle 3 Positions Women
10m Air Rifle Women
25m Pistol Women
10m Air Pistol Women
Trap Women
Skeet Women

3.3.2.3 Mixed Team Events:

Name of Event
10m Air Rifle Mixed Team
10m Air Pistol Mixed Team
Trap Mixed Team

3.3.3 World Championship events, individual and team competitions:

3.3.3.1 Mandatory Events for Men:

Name of event
10m Air Rifle Men
50m Rifle 3 Positions Men
50m Rifle Prone Men
10m Air Pistol Men
25m Rapid Fire Pistol Men
25m Center Fire Pistol Men
25m Standard Pistol Men
50m Pistol Men
Trap Men
Double Trap Men
Skeet Men
10m Running Target Men
10m Running Target Mixed Men
50m Running Target Men
50m Running Target Mixed Men

EDITION 2017 | Second Print 01/2018
Copyright: ISSF

3.3.3.2 Mandatory Events for Women:

Name of event
10m Air Rifle Women
50m Rifle 3 Positions Women
50m Rifle Prone Women
10m Air Pistol Women
25m Pistol Women
Trap Women
Skeet Women

3.3.3.3 Mandatory Mixed Team Events:

Name of Event
10m Air Rifle Mixed Team
10m Air Pistol Mixed Team
Trap Mixed Team

3.3.3.4 The Organizing Committee may include any ISSF recognized event in the program.

3.3.4 If 300m Rifle events cannot be included, the Executive Committee should choose a national federation to organize a separate 300m World Championship in the same year as the World Championships.

3.3.5 In all ISSF Championships a “Qualification” round and “Finals” are conducted in the Olympic events for Men and Women.

3.3.6 Events in the Continental Championships are decided by the Continental Confederations and must be events recognized by the ISSF.

3.3.7 Juniors are athletes who will be under the age of 21 on December 31st in the year of the Competitions / Championship. Juniors may participate in all ISSF supervised Competitions / Championships and Olympic Games as members of their national team.

3.3.7.1 The Organizing Committee, with the approval of the Executive Committee, may add junior events to the World Championships as official events.

3.3.7.2 Junior events should be included in Continental Championships by decision of the Continental Confederation.

3.3.7.3 Junior events for men and women juniors should be chosen from the recognized ISSF events, or be events designed to support the development of junior athletes.

Copyright: ISSF

3.3.8 If the number of individual entries in two (2) consecutive World Championships is less than 40 in men's events or 30 in women's events, the event will be removed from the list of mandatory events. An event will be removed from the list of recognized events if the number of individual entries in two (2) consecutive World Championships is less than 30 in men's events or 20 in women's events.

3.3.9 New events can be added to the list of ISSF recognized events after the following conditions have been met:

3.3.9.1 a minimum of five (5) member federations in two (2) continents must certify that the event is practiced in that country;

3.3.9.2 the appropriate ISSF Section Committee must develop rules for the event;

3.3.9.3 approval by the Administrative Council;

3.3.9.4 approval by the General Assembly.

3.4 ADMINISTRATION AND CONTROL OF ISSF CHAMPIONSHIPS

3.4.1 Each Member Federation organizing ISSF Championships must form an Organizing Committee that is responsible for the administration and conduct of the Competitions / Championships on the basis of ISSF General Regulations and Rules. The Organizing Committee must appoint a competition director and sufficient qualified staff to carry out these responsibilities and must submit reports to the Executive Committee. The Organizing Committee must inform the ISSF Headquarters, at least three (3) months before the day of arrival who is the contact person for the ISSF concerning all matters of the ISSF supervised Competition / Championships.

3.4.2 The ISSF supervises World Championships and Olympic Games through one (1) or two (2) Technical Delegates who are appointed in accordance with the Constitution of the ISSF. Technical Delegates should be chosen from the Members of the Administrative Council, or from the Section Committees, and must have an appropriate current ISSF “A” Judge's license. Technical Delegates cannot be appointed from the members of the federation of the organizing country. Technical Delegates are responsible for examining the preparations for organization and the ranges and other facilities, for advising the Organizing Committee before and during the Competitions / Championships and for submitting reports to the Executive Committee. The appropriate forms, together with the up to date World Records, will be supplied by the ISSF.

3.4.2.1 In order that the Technical Delegates can carry out these responsibilities, they must be invited at the expense of the Organizing Committee to the site of the Competitions / Championships at least once, 10 to 12 months before the Championship, and again, not less than five (5) days before the opening ceremony.

EDITION 2017 | Second Print 01/2018
Copyright: ISSF

3.4.3 The ISSF supervises World Cups, Continental Championships and other Competitions / Championships through the appointment of one (1) or two (2) Technical Delegates who are responsible for examining the preparations for competition and advising the Organizing Committee. Technical Delegates should be chosen from the Members of the Administrative Council, or from the Section Committees, and must have an appropriate current ISSF “A” Judge's license. Technical Delegates cannot be appointed from the members of the federation of the organizing country. The Technical Delegates must be invited at the expense of the Organizing Committee (accommodation in single rooms) to the Competitions / Championships, a few days before the opening ceremony as agreed with the organizing committee.

3.4.4 Juries must be designated by the ISSF for all Championships in accordance with the Constitution of ISSF. Juries are responsible for assisting and supervising the staff of the Organizing Committee in conducting the competition during the Competitions / Championships. In general the match staff is responsible for the actual conduct of competitions while the Jury advises and supervises the staff.

3.4.5 The following Competition Juries will be designated:

Rifle; Pistol; Shotgun; Running Target; RTS (Results, Timing and Scoring) and Equipment Control.

3.4.5.1 Two (2) Juries may be combined providing the events are not run concurrently. One (1) person from each of the Rifle, Pistol and Running Target Jury must be designated by that Jury to serve on the Jury for Equipment Control.

3.4.5.2 Juries will be composed of a chairman and two (2) to six (6) members (a chairman and four (4) to eight (8) members for Shotgun shooting). Officials or athletes who are members of a participating team must not be Jury members. One (1) member of each Jury should be from the national federation organizing the Championship. All Jury members must hold the applicable current ISSF Judge's license.

3.4.6 A Jury of Appeal must be designated by the ISSF for all ISSF Championships in accordance with the Constitution of the ISSF. The Jury of Appeal is responsible for making final decisions on all appeals against decisions by Juries.

3.4.6.1 The Jury of Appeal must consist of three (3) to five (5) members, including a chairman. One (1) member should be from the national federation organizing the Championship.

3.4.7 The local transportation and living expenses (single rooms) for the Technical Delegate(s), Jury of Appeal, Jury Members and ISSF appointed Officials at World Championships and World Cups must be paid by the Organizing Committee. The travel expenses must be paid by the organizing committee in the amount fixed by the Administrative Council or Executive Committee.

Copyright: ISSF

3.5 RANGES AND OTHER FACILITIES

3.5.1 The following minimum range installations are required:

	World Cham-pion-ships	Olympic Games	World Cups	Finals Range
300m Targets	40	--	--	--
50m Targets	80	60	60	10
25m	10 groups	8 groups	8 groups	3 groups
Trap	4	3	4	1
Double Trap	4	--	--	--
Skeet	4	3	4	1
50m Running Tar-get Ranges	2	--	--	--
10m Running Tar-get Ranges	4	--	--	--
10m Air Rifle and Pistol	80	60	60	10

Note: The ISSF recommends that for World Cups the number of targets/ranges specified for World Championships should be available including a separate Finals range.

3.5.1.1 Trap and Skeet ranges may be combined. Trap ranges must be convertible to Double Trap unless separate Double Trap ranges are provided.

3.5.1.2 The area used by athletes on Rifle and Pistol ranges must be protected from sun, wind and rain.

3.5.1.3 Air Gun ranges must be installed indoors.

3.5.1.4 Electronic target systems, of makes and models approved by the ISSF, must be used for Pistol and Rifle Qualification and Finals of the Olympic Games and for Finals in ISSF World Cups and World Championships.

3.5.2 The following facilities must be provided on or near the shooting ranges:

3.5.2.1 shelters against sun, wind and rain for athletes and officials;

3.5.2.2 team rooms where the athletes can relax, change clothes, etc.;

3.5.2.3 meeting rooms for use by ISSF Officials, Committees and Juries;

3.5.2.4 rooms for offices, target scoring, production of results and storage of targets and related material, etc;

3.5.2.5 a Main Scoreboard for posting official results;

3.5.2.6 an armoury;

EDITION 2017 | Second Print 01/2018
Copyright: ISSF

3.5.2.7 a suitable place for arms and equipment control;

3.5.2.8 a gunsmith's shop with suitable work benches and vices;

3.5.2.9 appropriate free facilities for firearms and equipment manufacturers to service their products (a fee may be charged for commercial displays);

3.5.2.10 a restaurant or facilities for food service and refreshments;

3.5.2.11 toilets and washrooms;

3.5.2.12 postal, telephone and electronic mail facilities;

3.5.2.13 an area for victory ceremonies;

3.5.2.14 facilities for press, radio and television representatives;

3.5.2.15 appropriate medical facilities and facilities for Anti-Doping Control;

3.5.2.16 parking facilities.

3.5.3 The ISSF Technical Delegates are responsible for examining the ranges and other facilities to ensure that they meet ISSF standards and are suitable for conducting Competitions / Championships. The Technical Committee will provide checklists in accordance with the ISSF Regulations and Rules for use by the Technical Delegates in examining the ranges and facilities (available from ISSF Headquarters).

3.5.4 Ranges to be used for World Championships and Olympic Games should be completed one (1) year in advance. If the range is not completed, the detailed plans, construction schedule and financial plan must be submitted to the Secretary General one (1) year in advance, and the range must be completed three (3) months in advance.

3.6 ENTRY AND PARTICIPATION

3.6.1 Only ISSF Member Federations may participate in ISSF Championships. Federations participating in Continental Championships and Games must be members of the Continental Confederation.

3.6.2 An ISSF Member Federation that is not accepted as a member by its own Continental Confederation, or is not allowed to participate in its own Continental Championships, may be invited by another Continental Confederation to participate in its Continental Championships and Games with the right to awards and records.

3.6.3 Any athlete must be a national of the country they represent.

3.6.3.1 All disputes relating to the determination of the country which an athlete may represent shall be resolved by the ISSF Executive Committee.

Copyright: ISSF

3.6.3.2 An athlete who is a national of two (2) or more countries at the same time may represent either one (1) of them, as he may select. However, after having represented one (1) country in the Olympic Games or in any ISSF Championships, he may not represent another country unless he meets the conditions set forth in paragraphs below that apply to persons who have changed their nationality or acquired a new nationality.

3.6.3.3 An athlete who has represented one (1) country in the Olympic Games or in any ISSF Championship, and who has changed his nationality or acquired a new nationality, may participate in ISSF Championships to represent his new country provided that at least three (3) years have passed since the athlete last represented his former country. This period may be reduced or even cancelled, with the agreement of the Federations concerned and by the ISSF Executive Committee, which takes into account the circumstances of each case.

3.6.3.4 If an associated State, province or overseas department, a country or colony acquires independence, if a country becomes incorporated within another country by reason of a change of border, if a country merges with another country, or if a new NOC is recognised by the IOC, an athlete may continue to represent the country to which he belongs or belonged. However, he may, if he prefers, elect to represent his country or be entered in ISSF Championships by his new Federation when recognized by the ISSF. This particular choice may be made only once.

3.6.3.5 Furthermore, in all cases in which an athlete would be eligible to participate in ISSF Championships, either by representing another country than his or by having the choice as to the country which such athlete intends to represent, the ISSF Executive Committee may take all decisions of a general or individual nature with regard to issues resulting from nationality, citizenship, domicile or residence of any athlete, including the duration of any waiting period.

3.6.4 The period following naturalization may be reduced or even cancelled with the agreement of the two (2) National Federations concerned and the final approval of the ISSF Executive Committee.

3.6.5 An official declaration of eligibility for each athlete will be required from the Member Federation. Team officials participating in ISSF Championships must abide by the ISSF Rules and Regulations.

3.6.6 All athletes must sign a “Athlete's Declaration” and have an ISSF ID Number before participation in any ISSF Championships. Failure to deliver a signed declaration before any start will lead to disqualification and cancellation of the results obtained.

3.6.7 Maximum participation in the Olympic Games is established by the IOC. Qualification standards are established by the ISSF Executive Committee that also has the authority to take the final decision on the distribution of the quota places and the Wild Cards in cooperation with the IOC Tripartite Commission.

EDITION 2017 | Second Print 01/2018
Copyright: ISSF

3.6.8 In the World Championships each nation can enter a maximum of three (3) athletes in individual events who may participate as one (1) team in team events.

3.6.8.1 The maximum national team size for World Championships events is as follows:

Men	
Rifle	10 (8 if 300m is conducted separately or if 300m is not entered)
Pistol	10
Trap	3
Double Trap	3
Skeet	3
Running Target	5
Total Men	34

Women	
Rifle	8 (6 if 300m is conducted separately or if 300m is not entered)
Pistol	5
Trap	3
Double Trap	3
Skeet	3
Running Target	3
Total Women	25

3.6.8.2 Officials

All persons entered as Officials must pay all appropriate fees.

3.6.8.3 Replacements may be made only in the teams of three (3) registered for team events, but only from those already registered for this championship.

3.6.8.4 When junior category events are scheduled in the World Championships, the number of athletes allowed per event is the same.

a) In World Championships, juniors may participate in the men's and the women's competitions, but in one (1) category only (either in the junior's or in the senior's events) at the same championships (place and dates).

b) If there is no junior category programmed for a particular event in a championship, juniors may participate in this event as a member of the national senior category team, even if they participate in the junior category in another event in the same championship.

Copyright: ISSF

3.6.9 The participating federation is responsible for the travel and living expenses of team members. The Organizing Committee must provide transportation from the local airport or railway station to the official hotels and from the official hotels to the range. The cost for transfer from the airport(s) to the official hotels and back may be charged when approved by the Executive Committee of the ISSF.

3.7 COMPETITION PROCEDURES

3.7.1 The ISSF General Regulations and the applicable current ISSF Competition Rules will govern the conduct of events in all ISSF Championships.

3.7.2 Programs

3.7.2.1 **The Preliminary Program** must be prepared by the Organizing Committee and submitted to the Secretary General for examination by the Technical Committee and approval by the Executive Committee.

	World Championships	World Cups
Send to ISSF	15 months	8 months
OC to federations	12 months	6 months

The schedule for the mandatory events of the World Championships including training days and the opening and closing ceremonies should not exceed 14 days. At the option of the Organizing Committee, the ranges may be opened for additional training days before official training begins. The duration of the World Championships may be extended to not more than 16 days with the approval of the Executive Committee.

3.7.2.2 **The Final Program** must be prepared by the Organizing Committee and submitted to the Secretary General for examination by the Technical Committee and approval by the Executive Committee.

	World Champi-on-ships	World Cups	Continental Champions-hips (Other supervised Competitions)
Send to ISSF	6 months	3 ½ months	4 months for information only
OC to federations	5 months	3 months	

EDITION 2017 | Second Print 01/2018
Copyright: ISSF

3.7.3 Entries

3.7.3.1 Preliminary Entries

Each national federation entering the Championship must submit a preliminary entry to the Organizing Committee. The preliminary entry must list all individual and team events in which the national federation will participate. Any preliminary entries received after the Final Program is published will be entered on a **waiting list** according to the date of the receipt of the entry and it may be that the participation is only possible if targets/places are available. The Organizing Committee must inform the Nations in question of any such change immediately after these entries are received.

World Championships	World Cups
7 months	4 months

3.7.3.2 Final Entries

Final Entries must be forwarded directly to the ISSF by fax or e-mail before midnight (Munich time) of the 30th day before the official arrival day. The final entries to the ISSF may be made via the ISSF online registration. The final entry must list the names and ID Numbers of all athletes. Also the final entry must list the names and dates of birth of all officials with their function.

3.7.3.3 The Organizing Committee reserves the right to reject any entries received after the deadlines in this article and / or establish a waiting list.

3.7.3.4 Late entries received after the deadline for final entry must not be allowed to participate in the events unless received by the ISSF three (3) days before the official arrival day and the following can be complied with:

a) the final Program may not be changed;

b) the late entries do not cause a problem with any other organizational matters;

c) any entry accepted after the final entry deadline will incur an additional penalty fee of Euro 50.00 for each athlete entered in each event which has to be paid to the Organizing Committee by the federation who makes the late entry.

3.7.3.5 Any additional entries received after the deadline of three (3) days before the official arrival day may not participate.

3.7.3.6 Replacement of a registered athlete by another already registered athlete for that Competitions / Championships is permitted. This change can only be made before 12:00 the day before the Pre-Event Training for that event.

3.7.3.7 In World Cups: the exchange of a athlete between one (1) competing for a quota place and a MQS athlete is not permitted. A MQS athlete may replace a withdrawn quota place athlete. The withdrawn quota place athlete may not shoot for MQS.

Copyright: ISSF

3.7.4 Fees

3.7.4.1 Entry fees must be paid to the Organizing Committee upon request. A fee of Euro 170.00 will be paid for each athlete entered in each event. This fee will be retained by the Organizing Committee; they must forward a fee of Euro 5.00 for each athlete in each event to the ISSF within 30 days after the Championships. A fee of Euro 50.00 must be paid for each official.

3.7.4.2 A reasonable fee for Shotgun training may be charged when approved by the Executive Committee of the ISSF.

3.7.4.3 Any federation reducing the number of athletes and / or officials after the Final Entry Deadline is obligated to pay all applicable fees and costs including entry fees according to the number of athletes and entries on the Final Entry Forms originally received. If the applicable fees and costs are not paid no member of that federation may participate.

3.7.4.4 In Continental Competitions / Championships a fee of Euro 5.00 for each athlete entered in each event must be paid to the ISSF within thirty (30) days after the Championship.

3.7.4.5 In regional or other Competitions / Championships with MQS status a fee of Euro 5.00 for each athlete entered in each event must be paid to the ISSF within thirty (30) days after the Competitions / Championships.

3.7.5 Information to be sent to ISSF Headquarters

3.7.5.1 Copies of all invitations, programs and entry forms for all ISSF Championships must be sent to the Secretary General.

3.7.5.2 One (1) copy of the official result lists of each event must be sent to the ISSF Headquarters via Fax and/or e-mail immediately after it has been verified, but not later than the end of the competition day.

3.7.5.3 Three (3) copies of the official result lists must be sent to the ISSF Secretariat no later than three (3) days after the completion of the events. A list showing the number of countries and the number of athletes participating in each discipline, by events, must be included with the results lists.

3.7.6 Olympic Games

3.7.6.1 Programs, schedules, forms and other details must be received by the ISSF checked and agreed with the Organising Committee.

3.7.6.2 Entries in the Olympic Games must be made using the procedures specified in the ISSF General Regulations except that schedules or special procedures established by the ISSF or IOC will prevail.

EDITION 2017 | Second Print 01/2018
Copyright: ISSF

3.7.6.3 Anti-Doping Control in the Olympic Games will be conducted according to the procedures established by the IOC. Anti-Doping Control in all ISSF Championships will be conducted in all events and categories according to procedures established by the ISSF Anti-Doping Regulations.

3.8 PROTOCOL

3.8.1 The World Championships must be inaugurated with an opening ceremony that is held on either the first day of competition or the day before. A closing ceremony must be held on the last day of competition. The Executive Committee must approve arrangements for the opening and closing ceremonies.

3.8.2 In World Championships the Organizing Committee must award:

3.8.2.1 World Championship medals in gold, silver and bronze colors to the first three (3) individual event winners. A minimum of 15 individuals in each of the men's and women's events or 10 individuals in men's and women's junior events must participate before individual medals can be awarded.

3.8.2.2 Team Championship medals of similar design in gold, silver and bronze colors to each member of the first three (3) team event winners. A minimum of five (5) teams in each of the men's and women's events or three (3) teams in men's and women's junior events must participate before team medals can be awarded.

3.8.2.3 If these minimums are not reached, the event will be declared an “International Championship” of the nation which organized the competitions.

3.8.2.4 Certificates or Diplomas to the first eight (8) athletes in each individual event.

3.8.3 A commemorative medal, of a different design from the Championship medals to each athlete, team official, judge and delegate.

3.8.4 The design of all official awards and the official symbol must be submitted to the Secretary General for approval by the Executive Committee at least two (2) months in advance.

3.8.5 A victory ceremony must be held for each Championship event, following these conditions:

3.8.5.1 the flags of the first three (3) individual or team winners must be raised while the anthem of the winner is played;

3.8.5.2 the flags, anthems and emblems used by National Member Federations must be submitted to and approved by the Executive Committee of the ISSF;

3.8.5.3 the Executive Committee must approve the program for the victory ceremony. The Organizing Committee with the approval of the ISSF President must establish the time of the victory ceremony.

Copyright: ISSF

3.9 WORLD RECORDS

3.9.1 World Records may be established in all recognized ISSF men's, women's, and juniors' events in Olympic Games, World Championships, World Cups, World Cup Finals, Continental Championships and Continental Games that are conducted according to the ISSF Rules and Regulations.

3.9.2 Finals World Records may be established only in Olympic event for men and women and are comprised of the results of the Qualification Rounds added to the results of the Finals for each event, as specified in the Olympic Shooting Disciplines' Rules.

3.9.3 World Records Junior will be recognized only in events for juniors fired either as special Junior competitions in ISSF Championships or by Junior athletes competing in regular competitions in ISSF Championships. World Records Junior will be recognized if a minimum of 10 athletes participate in the individual event and three (3) teams participate in the team event.

3.9.4 World Records will be recognized in individual events if a minimum of 15 athletes participate and in team events, if a minimum of five (5) teams participate.

3.9.5 The ISSF will issue a World Record diploma to athletes or team members who establish World Records.

3.9.6 If more than three (3) athletes per country are admitted to the World Cups, World Records can only be achieved by the athletes nominated for the main competitions (not those entered for MQS only).

3.9.7 The Technical Delegate(s) must submit reports for recognition of World Records.

3.10 MEDIA RELATIONS

3.10.1 The Media Coverage, Broadcasting and Advertising Rights of all ISSF World Championships, World Cups and other ISSF official events (General Assemblies, Congresses etc) are the property of the International Shooting Sport Federation.

3.10.2 Press, radio and television services must be given all cooperation and assistance to ensure the free flow of public information and communication. Necessary facilities including telecommunications, telephone, typewriters, etc. must be available prior to and during the Competitions / Championships.

3.10.3 Provisions for interviews, photography and other media requirements will be made by the Organizing Committee to ensure that media personnel have access to athletes and team leaders; provided that such arrangements do not inconvenience the individual(s) concerned. Media representatives may communicate with athletes through their respective team leaders.

EDITION 2017 | Second Print 01/2018
Copyright: ISSF

3.11 GENERAL

3.11.1 Alterations of the General Regulations may only be made by the General Assembly.

3.11.2 Upon approval, alterations become effective on January 1st, of the year following the current or the next Olympic Games.

3.12 ANNEXES

3.12.1 The General Regulations may be extended by annexes for the following:

3.12.2 The annexes to the General Regulations may not contravene the General Regulations and must be approved by the Executive Committee in accordance with the Constitution of the ISSF.

Copyright: ISSF

3.12.3 List of Annexes

Note: Separate Manuals, available at the ISSF Headquarters

- Guidelines for Organization of ISSF World Cups
- Checklists for Technical Delegates

3.12.3.1 Special Regulations for the Participation in the Shooting Sport Events of the Olympic Games: Annex "Q;"

3.12.3.2 Athlete Declaration and ISSF ID Number Application Form: Annex "D;"

3.12.3.3 General Procedures for Organizing Committees: Annex "G;"

3.12.3.4 Application Procedures for World Championships and World Cups: Annex "W;"

3.12.3.5 Code of Ethics: Annex "CE;"

3.12.3.6 Procedures for Verification of World Records: Annex "R;"

3.12.3.7 Rules for Filing and Deciding Protests: Annex "P;"

3.12.3.8 Guidelines for Training Academy: Annex "TA;"

3.12.3.9 Guidelines for Judges: Annex "J;"

3.12.3.10 Guidelines for Shotgun Referees: Annex "S;"

3.12.3.11 Guidelines for Public Affairs Activities: Annex "A;"

3.12.3.12 Guidelines for TV Broadcasting and Advertising: Annex "B":

a) all rights concerning contractual and proprietary matters with the production and use of television, radio, film and photographic coverage of the World Championships, World Cups and of Intercontinental Competitions / Championships are the exclusive property of the International Shooting Sport Federation;

b) these rights may not be sold, transferred or negotiated without the written agreement of the President and Secretary General acting on the decision of the Executive Committee, which may delegate its authority to negotiate the sale or utilization of these rights, but which must retain the sole responsibility for the final decision and for the utilization of the income from the sale of the rights.

3.12.3.13 Rules for the Athletes Committee: Annex "AC;"

EDITION 2017 | Second Print 01/2018
Copyright: ISSF

3.13 APPROVAL

3.13.1 These General Regulations were approved by the Ordinary General Assembly of the ISSF on October 30th, 1982 in Caracas, Venezuela, and replace the "General Regulations, edition 1977" and became effective on November 15th, 1982 (revised, amended and corrected by the General Assembly of ISSF on July 29th, 1988 in Madrid, ESP). This edition includes amendments and corrections approved by the General Assemblies of the ISSF on August 14th, 1990 in Moscow, URS and on April 27th, 1992 in Barcelona, ESP and on July 22nd, 1994 in Milan, ITA, on April 20th, 1996 in Atlanta, USA and on July 15th, 1998 in Barcelona, ESP, on 21st March 2000 in Sydney, AUS, on April 18th, 2004 in Athens, GRE, on April 10th, 2008 in Beijing, CHN and on June 25th, 2017 in Munich, Germany.

Copyright: ISSF

3.14 INDEX

300m Rifle Events not included in World Championships	3.3.3.4
Administration of Competitions / Championships	3.4
Alteration of the General Regulations	3.11.1
Annexes to the General Regulations	3.12
Anti-Doping Control in ISSF Championships	3.7.6.3
Anti-Doping Control in Olympic Games	3.7.6.3
Application Procedures for WCH and WC	3.12.3.4
Application of Rules and Regulations	3.7.1
Approval of Designs and Symbols	3.8.4
Athlete's Declaration	3.6.6 / 3.12.3.2
Athletes Committee Rules	3.12.3.13
Awards – World Championships	3.8.2
Code of Ethics	3.12.3.5
Combined Juries	3.4.5.1
Combined Shotgun Ranges	3.5.1.1
Commemorative Medals	3.8.3
Communication between the Media and Athletes / Team Officials	3.10.3
Competition Juries	3.4.5
Competition Procedures	3.7
Completion of Ranges	3.5.4
Composition of Juries	3.4.5.2
Continental Championships	3.2.5
Continental Championships – Events recognized by the ISSF	3.3.6
Control of Competitions / Championships	3.4
Cooperation and Information for the Media	3.10.2
Diplomas / Certificates	3.8.2.4
Diplomas for World Records	3.9.5
Disqualified Team Member	3.3.1.7
Duration of World Championships	3.7.2.2
Effectivity of Alterations	3.11.2
Entries	3.7.3
Entries after 3 Days before the Official Arrival Day	3.7.3.5
Entries after Deadline	3.7.3.3
Entries in Olympic Games	3.7.6.2
Entry and Participation	3.6
Entry Fees	3.7.4.1

EDITION 2017 | Second Print 01/2018
Copyright: ISSF

EST – Electronic Scoring Targets	3.5.1.4
Exchange of an Athlete in World Cups	3.7.3.7
Extra Charge of Transportation Costs	3.6.9
Facilities	3.5.2
Fees	3.7.4
Fees for Officials	3.7.4.1
Fees for Training	3.7.4.2
Fees to the ISSF HQ	3.7.4.1
Fees to the ISSF HQ for Championships with MQS - Status	3.7.4.5
Fees to the ISSF HQ for Continental Championships	3.7.4.4
Final Entries	3.7.3.2
Final Program	3.7.2.3 / 3.7.3.4 a
Finals World Records	3.9.1.2
Finals in Olympic Events	3.3.2
General Aspects of the General Regulations	3.11
General Procedure for Organising Committees	3.12.3.3
Guidlines for Judges	3.12.3.9
Guidelines for Public Affairs Activities	3.12.3.11
Guidelines for Shotgun Referees	3.12.3.10
Guidelines for Training Academy	3.12.3.8
Guidelines for TV Broadcasting & Advertising	3.12.3.12
Included Events in World Championships	3.3.3.4
Indoor Ranges – 10m Events	3.5.1.3
Information to the ISSF HQ	3.7.5
International Championship	3.8.2.3
Invitation of the Technical Delegate(s)	3.4.2.1
ISSF Championships	3.2
ISSF ID Number	3.6.6 / 3.12.3.2
ISSF Technical Delegate's Responsibilities	3.5.3
Junior Events in Continental Championships	3.3.7.2
Junior Events in World Championships	3.3.7.1
Juniors – Age Definition	3.3.7
Juniors in World Championships	3.6.8.4
Juniors Participating in Men's or Women's Events in WCH	3.6.8.4.a
Juniors Participating in Senior's and Junior's Events in WCH	3.6.8.4.b
Juries	3.4.4
Jury – Accommodation in Single Rooms and Travel Expenses	3.4.7
Jury – Local Transportation and Living Expenses	3.4.7

Copyright: ISSF

Jury of Appeal	3.4.6
Late Entries	3.7.3.4
List of Annexes to the General Regulations	3.12.3
Mandatory Event – Removal of an Event	3.3.8
Mandatory Events for Men in World Championships	3.3.3.1
Mandatory Events for Mixed Team in World Championships	3.3.3.3
Mandatory Events for Women in World Championships	3.3.3.2
Medals for Individuals – World Championships	3.8.2.1
Medals for Teams – World Championships	3.8.2.2
Media Relations	3.10
Men Junior Events	3.3.1.4
Men's Events	3.3.1.1
Minimum Requirements for Individuals – World Championships	3.8.2.1
Minimum Requirements for Teams – World Championships	3.8.2.2
Mixed Team Event	3.3.1.3
Mixed Team Junior Events	3.3.1.6
Nationality of Athletes	3.6.3
New Events	3.3.9
Number of Firing Points / Ranges required	3.5.1
Officials in World Championships	3.6.8.2
Olympic Events	3.3.2
Olympic Events for Men	3.3.2.1
Olympic Events for Mixed Team	3.3.2.3
Olympic Events for Women	3.3.2.2
Olympic Games	3.7.6
Olympic Games: Programs, Schedules, Forms	3.7.6.1
Opening and Closing Ceremonies – World Championships	3.8.1
Organising Committee	3.4.1
Participation in the Olympic Games	3.6.7
Participation in World Championships	3.6.8
Penalty Fee for Entries after Deadline	3.7.3.4.c
Preliminary Entries	3.7.3.1
Preliminary Program	3.7.2.1
Procedures for Verification of World Records	3.12.3.6
Programs	3.7.2
Property of Rights	3.10.1
Protection from sun, wind and rain	3.5.1.2 / 3.5.2.1
Protocol – World Championships	3.8

EDITION 2017 | Second Print 01/2018
Copyright: ISSF

Purpose	3.1
Ranges	3.5
Recognized Events	3.3.1
Reducing the Number of Athletes and Officials	3.7.4.3
Removal of a Mandatory Event	3.3.8
Replacement of an Athlete	3.7.3.6
Replacement of Athletes in World Championships	3.6.8.3
Report of World Records by the Technical Delegate	3.9.7
Reports & Information to the ISSF HQ by the Organising Committee	3.4.1
Rules for Filing and Deciding Protests	3.12.3.7
Shooting Sport Events	3.3
Special Regulations for Participation in Events of OG	3.12.3.1
Team Size in World Championships	3.6.8.1
Teams	3.3.1.7
Technical Delegate(s) for Continental Championships, Word Cups etc.	3.4.3
Technical Delegate(s) for World Championships / Olympic Games	3.4.2
Transportation by the Organising Committee	3.6.9
Travel and Living Costs for Team Members	3.6.9
Victory Ceremonies	3.8.5
Waiting List after the Deadline of Preliminary Entries	3.7.3.1
Waiting List for Entries after Final Entries Deadline	3.7.3.3
Wild Cards for the Olympic Games	3.6.7
Women Junior Events	3.3.1.5
Women's Events	3.3.1.2
World Championship Events Individual / Team / Mixed Team	3.3.3
World Championships – Chosen minimum 4 Years in advance	3.2.3
World Championships – Requirements for the Proposal / Application	3.2.6
World Championships – Year of Organization	3.2.2
World Cups	3.2.4
World Records	3.9
World Records for Juniors	3.9.3
World Records for Men and Women	3.9.2
World Records in World Cups	3.9.6

Copyright: ISSF

Article 3.12.3.1, Annex „Q“: Special Regulations for the Participation in the Shooting Sport Events of the Olympic Games in Tokyo 2020.

EDITION 2017 | Second Print 01/2018
Copyright: ISSF

Article 3.12.3.2, Annex “D”: Athlete Declaration and ISSF ID Number Application Form

Copyright: ISSF

ISSF Athlete Declaration
Page 1 of 2

1) To participate in ISSF Championships it is mandatory for all athletes to have an ISSF Identification Number (ISSF ID Number).

2) In order for an ISSF ID Number to be issued, the athlete's ISSF Member Federation must submit an application on the form that follows.

3) Each athlete must be a national of the country that they represent and must provide a copy of the passport with their application.

4) Each athlete may only apply for one (1) ISSF ID Number.

5) A fee of Euro 10.00 is charged for the issue of each ISSF ID Number.

6) The ISSF Member Federations must send all applications for ISSF ID Numbers to the ISSF. Only typed or e-mail application(s) will be accepted.

7) The ISSF will send the ISSF Member Federations a list with all new ISSF ID Numbers within 14 days after the application(s) are submitted. The ISSF Member Federations must check and approve this list and return it to the ISSF. No response will be taken as approval.

8) Express application (issue within one (1) week) increases the fee to Euro 20.00.

9) If an athlete changes his/her name or nationality, the ISSF must be notified without delay, so that necessary changes can be made by the ISSF. The original ISSF ID Number will not change, but the ISSF must correct data associated with the ISSF ID Number.

10) I am aware of the rules and regulations of the ISSF, including its Anti-Doping Rules. I agree to comply with such rules, regulations and procedures in the respective applicable version, to submit to the jurisdiction of the bodies which are in charge of applying them, and to be bound by any enforceable penalties deriving from my breach of these rules and regulations whether in the course of ISSF official competitions or out of competition.

11) I understand that I have important obligations under the ISSF Anti-Doping Rules and that I am liable for a breach of these obligations.

12) I agree to submit to testing when requested to do so and to respect all possible consequences arising from the doping control process.

13) I agree and consent to the ISSF collecting, processing, disclosing and using information for the purposes of the implementation of the ISSF Anti-Doping Rules in accordance with the International Standard for the Protection of Privacy and Personal Information and pursuant to applicable data protection laws.

EDITION 2017 | Second Print 01/2018
Copyright: ISSF

ISSF Athlete Declaration
Page 2 of 2

14) I agree that any dispute arising between myself and ISSF which cannot be settled amicably and which remains once the remedies provided for in the ISSF Regulations have been exhausted, shall be settled fully and finally by the Court of Arbitration for Sport in accordance with the Code of Sports-related Arbitration, to the exclusion of any recourse to ordinary courts.

Date:		Place:		Signature athlete:	
In case of minor age, name of legal representative:				Signature of legal representative:	

ISSF Athlete Declaration 2017/V1.1-1

Copyright: ISSF

Application Form for the Issue of an ISSF ID Number

The ISSF Member Federation of _____

herewith applies for the issue of an ISSF ID Number which is necessary for the participation in ISSF supervised competitions and championships for the following athlete:

Family Name(s):	
Given Name(s):	
Maiden Name(s):	
Nationality:	
Gender:	Male ○ Female ○
Date of Birth:	Day ____ Month ____ Year ____
Event(s):	Rifle ☐ Pistol ☐ Shotgun ☐ Target Sprint ☐ Running Target ☐
Name who signs for federation:	
Signature of federation:	

Français:

1. Je reconnais avoir pris connaissance des règles et réglements de l'ISSF en vigueur, incluant les règles antidopage. J'accepte de me soumettre à ces règles et ces procédures dans la version respectivement applicable. Je reconnais la compétence des instances qui sont chargées de les appliquer et accepte d'être lié par les sanctions imposables pour une violation à cette réglementation, que ce soit en compétition officielle de l'ISSF ou hors compétition.
2. Je reconnais mes obligations en matière d'antidopage telles qu'énoncées dans les "ISSF Anti-Doping Rules" et conviens que ma responsabilité soit engagée pour toute violation de ces règles.
3. J'accepte de me soumettre aux contrôles antidopage lorsqu'exigé, ainsi qu'à respecter les résultats et conséquences découlant de ces contrôles.
4. Je consens et autorise l'ISSF à collecter, traiter, divulger et utiliser certaines informations pour les fins de son programme antidopage en conformité avec le Standard international pour la protection de l'information privée et personelle et autres lois applicables.
5. J'accepte que tout différend survenant entre l´ISSF et moi-même, lequel ne pourrait être réglé à l'amiable et subsisterait après l'épuisement des recours prévus aux réglementations de l´ISSF, soit tranché définitivement en conformité avec le Code de l'arbitrage en matière de sport, au Tribunal Arbitral du Sport (TAS) à Lausanne et ce à l'exclusion de tous recours aux tribunaux ordinaires.

EDITION 2017 | Second Print 01/2018
Copyright: ISSF

German:

1. Ich erkläre hiermit, dass mir die Regularien der ISSF inklusive der ISSF Anti-Doping Regeln bekannt sind. Ich bin damit einverstanden, diesen Regeln, Bestimmungen und den dazugehörigen Verfahrensregeln in der jeweils anwendbaren Fassung unterworfen zu sein.
2. Ich erkenne an, dass ich nach dem ISSF Anti-Doping Regeln bestimmten Pflichten unterworfen und verantwortlich bin, wenn ich diese verletze.
3. Ich erkläre mein Einverständnis, mich den Dopingkontrolluntersuchungen zu unterziehen, wenn ich dazu aufgefordert werde, und sämtliche sich aus den Dopingkontrolluntersuchungen ergebenden Konsequenzen zu respektieren.
4. Ich erkläre mein Einverständnis und meine Zustimmung zur Erfassung, Verarbeitung, Veröffentlichung und Verwendung von Daten durch die ISSF zum Zwecke der Umsetzung der ISSF-Anti-Doping Regeln entsprechend dem Internationalen Standard Für den Schutz der Privatsphäre und persönlicher Informationen und gemäß den anwendbaren Datenschutzgesetzen.
5. Ich erkläre mich damit einverstanden, dass sämtliche zwischen mir und der ISSF entstehenden Streitigkeiten, bei denen keine gütliche Einigung möglich ist, nach Erschöpfung des verbandsinternen Rechtsweges, vor dem Internationalen Sportgerichtshof („CAS“) in Lausanne, Schweiz, gemäß dem Code of Sports-related Arbitration unter Ausschluss staatlicher Gerichte bindend und endgültig geregelt werden.

Español:

1. Confirmo tener conocimiento de las reglas y reglamentos de la ISSF, incluyendo su Reglamento Antidopaje. Me comprometo a someterme a dichas normas, reglamentos y procedimientos en el versión respectivamente applicable, y a la jurisdicción de los organismos que se encargan de su aplicación. Además, estoy de acuerdo con estar sujeto a las posibles sanciones aplicables derivadas de mi incumplimiento con estas reglas y reglamentos, ya sea en el curso de las competiciones oficiales de la ISSF o fuera de competición.
2. Reconozco la importancia de cumplir con las obligaciones que me impone el Reglamento Antidopaje de la ISSF y que soy responsable por mi incumplimiento con dichas obligaciones reglamentarias.
3. Estoy de acuerdo en someterse a las pruebas de control antidopaje que me sean solicitadas y respetar todas las posibles consecuencias derivadas de dichos controles antidopaje.
4. Estoy de acuerdo y consiento que la ISSF recoja, procese, utilice y difunda la información necesaria para cumplir con los procedimientos establecidos en el Reglamento Antidopaje de conformidad con el Estándar Internacional para la Protección de la Privacidad y la Información Personal.
5. Estoy de acuerdo con que cualquier disputa que me enfrente a la ISSF, que no pueda resolverse amigablemente y que permanezca una vez que los recursos previstos en el Reglamento de la ISSF se hayan agotado-, será resuelta por el Tribunal de Arbitraje Deportivo en Lausana, Suiza, como instancia final y de acuerdo con el Código de Arbitrajes Relacionados con el Deporte (Código del CAS, por sus siglas en inglés), excluyendo cualquier recurso ante los tribunales ordinarios.

Copyright: ISSF

Article 3.12.3.3, Annex “G”: General Procedures for Organizing Committees

The general procedures for ISSF Championship Organizing Committees are found in several different ISSF documents. Organizers should begin by examining the following ISSF Rules and Regulations:

- ***ISSF General Regulations***, 3.1 – 3.14
- ***ISSF General Technical Rules***, 6.1 – 6.20, and all official ISSF documents that are referenced in the General Technical Rules.

Reference must also be made to the following ISSF Special Technical Rules, as applicable for the Championship:

- ***ISSF Rifle Rules***, 7.1 - 7.8
- ***ISSF Pistol Rules***, 8.1 - 8.14
- ***ISSF Shotgun Rules***, 9.1 – 9.20
- ***ISSF Running Target Rules***, 10.1 – 10.15

Detailed steps to plan and prepare for a Championship are found in the following document:

- ***Guidelines for Organizing ISSF Championships***, and all official ISSF documents that are referenced in the Guidelines.

The Guidelines are updated on an annual basis so Organizers must ensure that they obtain the most recent version that is posted on the ISSF website. The ***Guidelines for Organizing ISSF Championships*** also include several Annexes or additional documents that must be used by appropriate members of the Organizing Committee.

If any Organizer has questions or requires additional Information, they are urged to contact the ISSF Event Manager at ISSF Headquarters or the ISSF Technical Delegate who was appointed for the Championship.

EDITION 2017 | Second Print 01/2018
Copyright: ISSF

Article 3.12.3.4, Annex “W”: Application Procedures for ISSF World Championships and World Cups

The ISSF General Assembly chooses World Championship organizers in accordance with the ***ISSF General Regulations, 3.2.6.*** An ISSF Member Federation that wants to organize a World Championship must submit a proposal to the Secretary General one (1) month in advance of the General Assembly where the organizing federation will be chosen. Applicants must complete an ***Application for an ISSF World Championship*** and submit it to the Secretary General with all required documentation.

The Executive Committee chooses World Cup organizers in accordance with the ***ISSF General Regulations 3.2.4.*** An ISSF Member Federation that wants to organize a World Cup or World Cup Final must submit a proposal to the Secretary General not later than 31 December, three (3) years before the year in which the World Cup is to be organized. Applicants must complete an ***Application for an ISSF World Cup*** and submit it to the Secretary General.

ISSF Member Federations that submit applications for a World Championship or a World Cup must use the Application Forms printed in this Annex as a model form to ensure that all required information is submitted to the ISSF. When completing an application, applicants must provide additional explanations or details regarding their responses.

Copyright: ISSF

APPLICATION FORM FOR AN ISSF WORLD CHAMPIONSHIP

Federation Name:

Proposed Dates for Championship:		
Date of last major competition in your country:		
Organized in (city or town):		
WCH to be organized in (city or town):		
Attach documentation as Annexes to confirm the following:		
Support from the Government Sports Agency and/or NOC	Annex:	
Support from the National Olympic Committee	Annex:	
Statement of Respect for the ISSF Constitution	Annex:	
Statement of Invitation to all ISSF Member Federations	Annex:	
Shooting range description	Annex:	
Information regarding the proposed organization including cost of food and housing	Annex:	
Events in Program (World Championship events, 300m events, Junior events)	Annex:	

Shooting range ready for competition:	
Shooting range remodeling plans:	
Shooting range construction plans:	

Ranges	Number of firing points / ranges	Electronic Targets yes/ no	Manufacturer	Space for Spectators / number
300m Rifle				
50m Rifle/Pistol				
25m Pistol				
10m Air Rifle/Pistol				
Trap / Double Trap		n/a		
Skeet		n/a		
50m Running Target				
10m Running Target				
Separate Finals Range				

EDITION 2017 | Second Print 01/2018
Copyright: ISSF

VENUE OWNER	Government/Military _____
	National or Regional Shooting Federation _____
	Shooting Club _____
	Private (Name of owner) _____
	Other _____

Facilities for:	yes/no	m²	Facilities for:	yes/no	m²
ISSF President			ISSF Secretariat		
ISSF Secretary General			Jury of Appeal Room		
Tech. Delegates Offices			Jury Rooms		
Athlete Lounges (Team Rooms)			Classification Room		
EST Control Rooms			Medical Rooms		
Internet			Doping Control Rooms		
Equipment Control			Award Ceremony Area		
Changing rooms (close to Equipment Control)			Gunsmith Facilities		
Storage Rooms			Restaurant		
Commercial Displays			Toilets		
Parking Facilities			Media Center		
Preparation Area for Finals					

Number of ISSF Licensed Judges in Federation:	Class A	Class B
Rifle		
Pistol		
Shotgun		
Running Target		
Electronic Scoring Target Control		
Application submitted by:		

Signature:	Position:	Date:

Copyright: ISSF

APPLICATION FORM FOR AN ISSF WORLD CUP

The _____ hereby applies for a _____
(name of Federation) (title of event)

to be held at		on	
	(venue)		(preferred dates)

Disciplines: Rifle/Pistol ☐ Shotgun ☐

Organizing Committee:

Name of OC Secretary:	
Address of OC Secretary:	Phone:
	Fax:
	E-mail:

Rifle/Pistol Ranges: *Please answer the following questions for Rifle/Pistol only:*

Direction of shooting: 25m _____ 50m _____

Number of firing points available:	10m		25m		50m	
Electronic Target Manufacturer:	10m		25m		50m	

Is there a separate Finals range? ○Yes ○No

Are Finals ranges indoor/outdoor:	10m		25m		50m	
Electronic Target Manufacturer:	10m		25m		50m	

Do all ranges comply with current ISSF Rules? ○Yes ○No *If 'No' please specify on separate sheet*

EDITION 2017 | Second Print 01/2018
Copyright: ISSF

Shotgun Ranges: *Please answer the following questions for Shotgun only:*

Direction of shooting: [ ] Permitted shooting hours from [ ] to [ ]

Number of ranges available: combined / separate

TRAP [ ] DOUBLE TRAP [ ] SKEET [ ]

Manufacturer of target machines: [ ]

Do all ranges comply with current ISSF Rules? ○ Yes ○ No *If 'No' please specify on separate sheet*

VENUE OWNER

Government/Military _____

National or Regional Shooting Federation _____

Shooting Club _____

Private (Name of owner) _____

Other _____

Previous Events:

Please specify the last ISSF World Cup or similar event that your Federation has hosted at this venue:

Event: [ ] Date: [ ]

Travel and Accommodation:

Distance from ranges to nearest airport with international connections: km [ ]

Name of airport: [ ]

Approximate distance from ranges to nominated official hotels: km [ ]

Approximate travel time: minutes [ ]

Copyright: ISSF

Hotel ratings and approximate daily costs (in Euros):

	Single	Double		Single	Double		Single	Double		Single	Double
5*	€	€	4*	€	€	3*	€	€	Other	€	€

Internet:

What kind of internet connections are available at the venue for

Upload: _____ Download: _____

Regulations:

Please give an explanation below of any National Laws or Local Regulations of which the ISSF and its National Federations should be informed, e.g. 'Importation of firearms and ammunition':

Submitted:

Signature	Title/Position	Date

EDITION 2017 | Second Print 01/2018
Copyright: ISSF

Article 3.12.3.5, Annex “CE”: ISSF Code of Ethics

PREAMBLE

In accordance with the ISSF Constitution, the objectives of the ISSF are to promote and encourage the development of the shooting sport throughout the world, to provide drug-free sport and to promote and encourage the development of international relations.

The purpose of this Code is to guarantee that the objectives of the ISSF will be executed in a fair manner, without improper interference, and to sanction incidents that damage the image of ISSF activities or bring them into disrepute.

ISSF members, continental organizations, teams, officials and athletes shall participate in ISSF Championships and activities in accordance with the standards of ethics, fair play and sportsmanship established by the ISSF Statutes, Rules and Regulations and by this Code. This Code provides basic standards for fair play and moral behaviour and procedures for judging and sanctioning violations of those standards.

With the following regulations the ISSF adopts its own code of ethics based on the principles and rules of the IOC Code of Ethics.

Furthermore, acknowledging the danger to sports integrity from the manipulation of sports competitions, ISSF restates its commitment to safeguarding the integrity of sport, including the protection of clean athletes and competitions as stated in the Olympic Agenda 2020. Therefore, ISSF with these regulations also implements the new IOC Olympic Movement Code on the Prevention of the Manipulation of Competitions. The Definitions used in version 2016 of such IOC Code also apply to the following rules. These Ethics Rules had been ammended by decision of the ISSF Executive Committee in its meeting on February 21, 2017.

For enforcement of this Code, the ISSF will establish an Ethics Committee.

1 SCOPE OF APPLICATION

1.1 SCOPE OF APPLICABILITY

This Code shall apply to conduct that damages the integrity and reputation of sports and in particular to illegal, immoral and unethical behaviour.

1.2 PERSONS COVERED

This Code shall apply to all officials and employees of the ISSF, ISSF member federations, the Continental Shooting Sport Confederations, as well as to athletes, coaches and other participants in ISSF activities.

Copyright: ISSF

1.3 APPLICABILITY IN TIME

This Code shall apply to conduct whenever it occurred including before the passing of the rules contained in this Code.

However, no individual shall be sanctioned for breaching this Code on account of an act or omission which would not have contravened the Code applicable at the time the breach was committed.

Neither may they be subjected to a sanction greater than the maximum sanction applicable at the time the breach occurred.

This shall, however, not prevent the Ethics Committee from considering the conduct in question and drawing any conclusions from it that are appropriate.

1.4 SCOPE OF THE CODE, CUSTOM, DOCTRINE AND JURISPRUDENCE

During all its operations, the Ethics Committee may draw on precedents and principles already established by sports doctrine and jurisprudence.

EDITION 2017 | Second Print 01/2018
Copyright: ISSF

2 RULES OF CONDUCT

2.1 DUTIES

2.1.1 General Rules of conduct

Persons bound by this Code are expected to be aware of the importance of their duties and associated obligations and responsibilities.

Persons bound by this Code are obliged to respect all applicable laws and regulations, as well as ISSF Statutes, Rules and Regulations, and decisions taken by the competent ISSF bodies to the extent applicable to them.

Persons bound by this Code shall behave in a dignified manner and act with complete credibility and integrity. They shall respect universal fundamental ethical principles that include:

a) Respect for the Olympic spirit, which requires mutual understanding with a spirit of friendship, solidarity and fair play;

b) Respect for principles of universality, political neutrality and autonomy of the Olympic Movement;

c) Respect for international conventions on protecting human rights insofar as they apply to the Olympic Games and ISSF Championship activities and which ensure in particular:

- respect for human dignity;
- rejection of discrimination of any kind on whatever grounds, be it race, color, sex, sexual orientation, language, religion, political or other opinion, national or social origin, property, birth or other status;
- rejection of all forms of harassment, be it physical, professional or sexual, and any physical or mental injuries;

d) ensuring the participants' conditions of safety, well-being and medical care favorable to their physical and mental equilibrium.

Persons bound by this Code may not abuse their position in any way, especially to take advantage of their position for personal or private aims or gains.

Copyright: ISSF

2.1.2 Duty of fair behavior / sportsmanlike behaviour

Persons bound by this Code are expected to behave in a fair way and shall in particular refrain from any form of cheating including, but not limited to doping, manipulation of equipment or scores to give an advantage to an athlete or to a team, falsification or alteration of documents indicating false age, nationality, gender or other information, with the purpose of obtaining unfair advantage for an official, an athlete or a team.

2.1.3 Loyalty

Persons bound by this Code have a duty of loyalty to the ISSF and its members. Therefore, they shall in particular refrain from any act of indiscretion, insubordination or partiality.

2.1.4 Integrity of competitions

Persons bound by this Code shall not take part in, either directly or indirectly, or otherwise being associated with betting, gambling, lotteries and similar events or transactions connected with shooting competitions.

2.1.5 Other ethical offences

Other ethical offences, including the improper or illegal manipulation of equipment testing, ammunition testing, scoring decisions or competition results, illegal access to systems and data, committed by persons bound by this Code may be considered independent of any action taken or not taken by ISSF Competition Juries.

2.1.6 Forgery and falsification

Persons bound by this Code are forbidden from forging a document, falsifying an authentic document or using a forged or falsified document.

2.1.7 Duty of disclosure, cooperation and reporting

Persons bound by this Code shall immediately report any potential breach of this Code to the ISSF Secretary General or send an email to ethics@issf-sports.org.

At the request of the Ethics Committee, persons bound by this Code are obliged to contribute to clarifying the facts of the case or clarifying possible breaches and provide the evidence requested for inspection.

EDITION 2017 | Second Print 01/2018
Copyright: ISSF

2.2 UNDUE ADVANTAGE

2.2.1 Conflicts of interest

When performing an activity for the ISSF, or before being elected or appointed, persons bound by this Code shall disclose any potential conflicts of interest that could be linked with their prospective activities.

Conflicts of interest arise if persons bound by this Code have, or appear to have, private or personal interests that detract from their ability to perform their duties with integrity and in an independent manner. Private or personal interests include gaining any possible advantage for the persons bound by this Code for themselves, members of their family, relatives, friends and acquaintances.

Any such conflict shall be immediately disclosed and notified to the body or organization for which the person bound by this Code performs his duties.

If an objection is made concerning an existing or potential conflict of interest of a person bound by this Code, it shall be reported immediately to the organization for which the person bound by this Code performs his duties for appropriate measures.

2.3 OFFERING AND ACCEPTING GIFTS AND OTHER BENEFITS

Persons bound by this Code may only offer or accept gifts or other benefits to and from persons within or outside ISSF, or in conjunction with intermediaries or related parties as defined in this Code, which

a) have symbolic value;

b) are not given to influence a decision, voting behaviour or any other act that is related to their official activities or that falls within their discretion;

c) do not create any undue pecuniary or other advantage; and

d) do not create a conflict of interest.

Any gifts or other benefits not meeting all of these criteria are prohibited. Requests for guidance should be addressed to the Secretary General.

Copyright: ISSF

2.4 BRIBERY AND CORRUPTION

Persons bound by this Code must not offer, promise, give or accept any undue pecuniary or other advantage for the execution or omission of an act that is related to their official activities. Such acts are prohibited, regardless of whether carried out directly or indirectly through, or in conjunction with, intermediaries or related parties as defined in this Code. Any such offer must be reported in writing to the Secretary General and any failure to do so shall be subject to sanctions in accordance with this Code.

Persons bound by this Code are prohibited from misappropriating ISSF assets, regardless of whether carried out directly or indirectly through, or in conjunction with, intermediaries or related parties, as defined in this Code.

2.5 NON-DISCRIMINATION

Persons bound by this Code may not offend the dignity or integrity of a country, private person or group of people through contemptuous, discriminatory or denigrating words or actions on account of race, skin color, ethnic, national or social origin, gender, language, religion, political opinion or any other opinion, wealth, birth or any other status, sexual orientation or for any other reason.

2.6 PROTECTION OF PHYSICAL AND MENTAL INTEGRITY

Persons bound by this Code shall respect the integrity of others involved. They shall ensure that the personal rights of every individual whom they contact and who is affected by their actions is protected, respected and safeguarded.

EDITION 2017 | Second Print 01/2018
Copyright: ISSF

3 PREVENTION OF MANIPULATION

The following conduct as defined in this Article constitutes a violation of this Code:

3.1 BETTING

Betting in relation either:

a) to a Competition in which the Participant is directly participating; or

b) to the Participant's sport; or

c) to any event of a multisport Competition in which he/she is a participant.

3.2 MANIPULATION OF SPORTS COMPETITIONS

An intentional arrangement, act or omission aimed at an improper alteration of the result or the course of a Competition in order to remove all or part of the unpredictable nature of the Competition with a view to obtaining an undue Benefit for oneself or for others.

3.3 CORRUPT CONDUCT

Providing, requesting, receiving, seeking, or accepting a Benefit related to the manipulation of a Competition or any other form of corruption.

3.4 INSIDE INFORMATION

3.4.1 Using Inside Information for the purposes of Betting, any form of manipulation of Competitions or any other corrupt purposes whether by the Participant or via another person and/or entity.

3.4.2 Disclosing Inside Information to any person and/or entity, with or without Benefit, where the Participant knew or should have known that such disclosure might lead to the information being used for the purposes of Betting, any form of manipulation of competitions or any other corrupt purposes.

3.4.3 Giving and/or receiving a Benefit for the provision of Inside Information regardless of whether any Inside Information is actually provided.

3.5 FAILURE OF REPORT

3.5.1 Failing to report to ISSF or a relevant disclosure/reporting mechanism or authority, at the first available opportunity, full details of any approaches or invitations received by the Participant to engage in conduct or incidents that could amount to a violation of this Code.

Copyright: ISSF

3.5.2 Failing to report to ISSF or a relevant disclosure/reporting mechanism or authority, at the first available opportunity, full details of any incident, fact or matter that comes to the attention of the Participant (or of which they ought to have been reasonably aware) including approaches or invitations that have been received by another Participant to engage in conduct that could amount to a violation of this Code.

3.6 FAILURE TO COOPERATE

3.6.1 Failing to cooperate with any investigation carried out by ISSF in relation to a possible breach of this Code, including, without limitation, failing to provide accurately, completely and without undue delay any information and/or documentation and/or access or assistance requested by ISSF as part of such investigation.

3.6.2 Obstructing or delaying any investigation that may be carried out by ISSF in relation to a possible violation of this Code, including without limitation concealing, tampering with or destroying any documentation or other information that may be relevant to the investigation.

3.7 APPLICATION OF ARTICLES 3.1 to 3.6

3.7.1 For the determination of whether a violation has been committed, the following are not relevant:

a) Whether or not the Participant is participating in the Competition concerned;

b) The outcome of the Competition on which the Bet was made or intended to be made;

c) Whether or not any Benefit or other consideration was actually given or received;

d) The nature or outcome of the Bet;

e) Whether or not the Participant's effort or performance in the Competition concerned were (or could be expected to be) affected by the acts or omission in question;

f) Whether or not the result of the Competition concerned was (or could be expected to be) affected by the acts or omission in question;

g) Whether or not the manipulation included a violation of any ISSF rule;

3.7.2 Any form of aid, abetment or attempt by a Participant that could culminate in a violation of this Code shall be treated as if a violation had been committed, whether or not such an act in fact resulted in a violation and/or whether that violation was committed deliberately or negligently.

EDITION 2017 | Second Print 01/2018
Copyright: ISSF

4 DISCIPLINARY MEASURES, SANCTIONS

4.1 GENERAL

Breaches of this Code or any other ISSF Statutes, Rules and Regulations by persons bound by this Code are punishable by one or more of the following sanctions:

a) warning;

b) fine;

c) return of awards;

d) disqualification;

e) suspension;

f) expulsion;

g) ban on entering a competition or a venue;

h) ban on taking part in any shooting-related activity.

The Ethics Committee may decide that the notification of a case be made to the appropriate law enforcement authorities.

4.2 INVESTIGATIONS

The Participant who is alleged to have committed a violation of this Code must be informed of the alleged violations that have been committed, details of the alleged acts and/or omissions, and the range of possible sanctions.

4.3 BURDEN AND STANDARD OF PROOF

The ISSF shall have the burden of establishing that a violation has been committed. The standard of proof in all matters under this Code shall be the balance of probabilities, a standard that implies that on the preponderance of the evidence it is more likely than not that a breach of this Code has occurred.

4.4 CONFIDENTIALITY

The principle of confidentiality must be strictly respected by the ISSF during all the procedure; information should only be exchanged with entities on a need to know basis. Confidentiality must also be strictly respected by any person concerned by the procedure until there is public disclosure of the case.

Copyright: ISSF

4.5 DETERMINATION OF THE SANCTION

The sanction may be imposed by taking into account all relevant factors in the case, including the offender's assistance and cooperation, the motive, the circumstances and the degree of the offender's guilt.

The Ethics Committee shall decide the scope and duration of any sanction.

Sanctions may be limited to a geographical area or to one or more specific categories such as a competition.

Unless otherwise specified, the sanction may be increased as deemed appropriate if a breach has been repeated.

Where more than one breach has been committed, the sanction shall be based on the most serious breach, and increased as appropriate depending on the specific circumstances.

5 LIMITATION PERIOD

As a general rule, breaches of the provisions of this Code may no longer be prosecuted after a lapse of ten years.

The limitation period, when applicable, shall be prolonged if proceedings are opened and/or suspended.

EDITION 2017 | Second Print 01/2018
Copyright: ISSF

6 PROCEDURES

6.1 ETHICS COMMITTEE

The Ethics Committee consists of a Chairman and two additional members. The members of the Ethics Committee are appointed by the Executive Committee in case a complaint according to 6.2 below has been filed.

The members of the Ethics Committee must be independent and may not hold a position in the ISSF or any ISSF member federation.

The Ethics Committee is to be composed in such a way that the members, together, have the knowledge, abilities and specialist experience that is necessary for the due completion of their tasks. The Chairman and at least one other member shall be qualified to practise law.

Members of the Ethics Committee must disclose to the Chairman or the ISSF Secretary General any situation or fact that may establish a conflict of interest between themselves and the case under investigation. Such disclosure must be made immediately after the inquiry is opened or immediately after the situation or fact in question arises.

Any person being subject to investigations of a potential breach of this Code, or declaring a conflict of interest, may not be part of the Ethics Committee. In such cases, or if a member of the Ethics Committee is unable to act, the Executive Commitee must appoint a person acting as a replacement.

Copyright: ISSF

6.2 RULES FOR PROCEDURES

Any complaints, charges or guidance relating to a breach of ethical principles and rules should be addressedin writing to the Secretary General or to ethics@issf-sports.org. The Secretary General shall inform the Chairman in order to summon the Ethics Committee.

The Ethics Committee shall decide whether to conduct an inquiry or to dismiss the complaint.

When conducting an inquiry regarding a complaint or charges, the Ethics Committee may:

- Request written information or documents from the parties concerned;
- Hear the parties concerned, with or without the presence of legal counsel, as determined by the Ethics Committee;
- Decide to hear witnesses as determined by the Ethics Committee or at the request of the parties concerned;
- Conduct investigations in the field by designating one (1) or more of its members or another person to represent the Committee;
- Designate one (1) or more experts to assist the Ethics Committee in its inquiry.

In the absence of a consensus, decisions of the Ethics Committee shall be taken by majority of members present.

7 APPEALS

Decisions by the Ethics Committee may be appealed to the Court of Arbitration for Sport in Lausanne, Switzerland, (“CAS”) which will resolve the dispute definitively in accordance with the Code of sports-related arbitration. The time limit for appeal is twenty-one days after the reception of the decision concerning the appeal.

8 MUTUAL RECOGNITION

Subject to the right of appeal, any decision in compliance with this Code by an International Sporting Organisation shall be recognised and respected by the ISSF.

This ISSF Code of Ehtics was approved by the ISSF Executive Committee in its meeting on March 1, 2016. This edition includes ammendments and corrections approved by the ISSF Executive Committee on February 21, 2017.

EDITION 2017 | Second Print 01/2018
Copyright: ISSF

Article 3.12.3.6, Annex “R”: Procedures for Verification of World Records

World and Qualification World Records must be verified and approved by the Technical Committee (ISSF Constitution, 1.10.2.6). World and Qualification World Records must be established in accordance with the ISSF General Technical Regulations 6.14.9.

World and Qualification World Records become valid when competition results are final and the ISSF Technical Delegate or ISSF Secretary General confirms that the competition was conducted according to ***ISSF Rules and Regulations*** and that a valid World Record was equaled or exceeded in accordance with these requirements.

The official list of valid World Records is published by ISSF Headquarters on the ISSF website. World Record certificates are issued by the ISSF Secretary General.

Technical Delegates must use this form to report World Records for verification by the Technical Committee in accordance with Rule 6.14.9.5.

REPORT OF WORLD AND QUALIFICATION WORLD RECORDS

Name of ISSF Championship			
Men	**Women**	**Men Junior**	**Women Junior**

Athlete/Team Members	**Nation**	**Event**	**WR/QWR EWR/EQWR WJR/QWRJ EWRJ/EQWRJ**	**Score**

CONFIRMATION BY TECHNICAL DELEGATE

This verifies that this record(s) was established in an ISSF Championship 1) that was conducted according to ISSF Rules and Regulations, 2) that ISSF participation requirements (3.9) were fulfilled and that ISSF Anti-Doping Rules were followed:

Date:		Signature:	

RECORD(S) VERIFIED BY THE TECHNICAL COMMITTEE

Date:		Signature:	

EDITION 2017 | Second Print 01/2018
Copyright: ISSF

Article 3.12.3.7, Annex “P”: Rules for Filing and Deciding Protests

The ISSF establishes rules for and conducts Championships in which its Member Federations may enter individual athletes or teams. Athletes or team participating in ISSF Championships have a right to protest when competitions are not conducted according to ISSF Rules and Regulations. ISSF rules for filing and deciding protests are:

1) Protests filed at ISSF Championships must be decided according to ISSF Rules and Regulations;

2) Competition Juries (3.4.5) are responsible for receiving and deciding all protests;

3) The Jury of Appeal (3.4.6) is responsible for making final decisions on all appeals against protest decisions by Competition Juries. Decisions by the Jury of Appeal may not be appealed;

4) During Final round competitions, the Competition Jury shall supervise the Finals and make any decisions required by ISSF Rules and Regulations that do not involve protests. If a protest is made during a Final, a Final Protest Jury is responsible for making an immediate decision regarding the protest. Finals Jury decisions may not be appealed;

5) For **Final** round competitions where protests must be decided immediately, a combined Finals Protest Jury consisting of two (2) members of the Competition Jury plus one (1) member of the Jury of Appeal must be designated by the Technical Delegate and the appropriate Jury Chairman.

6) In a Final round no score protest is permitted except for a failure to indicate a shot. In such cases one (1) member of the RTS Jury must also be included;

7) Rules and forms for filing protests or appeals are specified in the ***General Technical Rules, 6.18 and 9.17***. ISSF protest rules provide for verbal protests that can be submitted and decided on the ranges immediately, for written protests to be decided by the appropriate Jury and for appeals of Jury decisions to be decided by a Jury of Appeal. The rules also provide for scoring protests to be decided by the RTS Jury with decisions on scoring protests not subject to appeal. The protest rules further provide that in Final round competitions, the Finals Jury shall make immediate decisions on any protests and that such decisions may not be appealed; and

EDITION 2017 | Second Print 01/2018
Copyright: ISSF

8) In the case of protests involving conflicts between the ***ISSF Constitution, ISSF General Regulations*** or Technical Rules, the ***ISSF Constitution*** shall take precedence over the ***ISSF General Regulations*** or Technical Rules and the ***ISSF General Regulations*** shall take precedence over the Technical Rules. In conflicts involving IOC Rules, the IOC Rules shall prevail.

Copyright: ISSF

Article 3.12.3.8, Annex “TA”: Guidelines for ISSF Academy (former ISSF Training Academy)

ISSF Academy Courses

1 BACKGROUND

1.1 Special ISSF training courses for coaches were approved by the Executive Committee in 1992 and ammended in 2011.

1.2 These diploma courses are designed for national coaches from Member Federations to achieve an international coaching qualification.

1.3 Coaching Diplomas are of three categories: “A,” “B” and “C.”

1.4 It is necessary first to attend a “C” course. Thereafter, coaches having achieved a Diploma can apply to attend a “B” course, and if successful an “A” Course.

1.5 The ISSF Academy also offers a regional or national coaching course “D,” which is held in the local language of the region in which the course is hosted. Material and certificates will be provided by the ISSF Academy.

1.6 A course fee is payable by each student attending a Coaching Diploma course. This covers the cost of running the course and any associated accommodation, meals and local transportation.

2 COACHING DIPLOMA COURSES

2.1 Official recognition of ISSF Academy Courses will be decided by the ISSF Executive Committee.

2.2 Instructors for these courses are chosen from those having specialist knowledge of the various topics in the course program.

2.3 Assistant Instructors, with similar qualifications, also may be designated depending upon the number of students attending.

2.4 The recommended course program lasts one (1) week.

2.5 The knowledge of the students is assessed by various tests at the different levels. The details are contained in the ISSF Academy Guidelines.

EDITION 2017 | Second Print 01/2018
Copyright: ISSF

2.6 The results are reported to the ISSF Executive Committee annually.

3 APPEALS

3.1 Any student may appeal in writing against the decision that he has failed a course. The appeal will be considered by the ISSF Executive Committee.

Copyright: ISSF

Article 3.12.3.9, Annex “J”: Guidelines for Judges Licenses

Chapters

1	GENERAL	*89*
2	ACQUISITION OF A LICENSE	*90*
3	VALIDITY AND EXTENSION OF THE LICENSE	*91*
4	EXPIRATION OF A LICENSE	*91*
5	UPGRADING	*94*
6	SPECIAL ADMINISTRATIVE PROCESS FOR THE ISSUANCE OF JUDGES’ LICENSES	*95*
7	ASSIGNMENT OF JUDGES	*96*
8	ELECTRONIC SCORING TARGET COURSES	*97*
9	APPLICATION FORMS FOR LICENSES	*98*

SPECIAL NOTE:

In the context of this Annex, the word “Judge” refers to an accredited ISSF Judge’s license holder. The word “Jury” refers to those licensed judges who are appointed to Jury duties at specified Championships.

EDITION 2017 | Second Print 01/2018
Copyright: ISSF

1 GENERAL

1.1 For the achievement of its purposes the International Shooting Sport Federation licenses judges to supervise shooting competitions and to ensure the fair and equal treatment of all competitors (see ISSF Constitution). Judges must be experienced and fully conversant with the current versions of the ISSF Rules and Regulations plus the relevant Technical Rules for the Shooting discipline concerned in order to Advise, Supervise and Assist if necessary.

1.2 The ISSF issues judges' licenses as confirmation of qualification.

1.3 Judges' licenses are divided into two (2) categories.

1.3.1 Category “A” authorizes the holder to act as an official Jury member at all shooting competitions, for which the license is valid with respect to the disciplines included, including the Olympic Games and World Championships. Judges of this category are also permitted to conduct official ISSF Judges’ courses when authorized by the ISSF Secretary General together with the Chairman of the Judges Committee. From January 2017, this authorization will require instructors, who have not previously conducted ISSF Judges Courses, to have attended and passed an ISSF “A” License Instructors Workshop.

1.3.2 Category “B” authorizes the holder to act as an official Jury member in all shooting competitions, for which the license is valid with respect to the disciplines included, except the Olympic Games and the World Championships.

1.4 The ISSF issues judges’ licenses for the following disciplines:

1.4.1 Rifle shooting (1)

1.4.2 Pistol shooting (2)

1.4.3 Shotgun shooting (3)

1.4.4 Running Target shooting (4)

1.4.5 Target Control (5)

1.4.6 Electronic Scoring Target Control (6)

1.4.7 The ISSF can issue judges' licenses for one (1) or more discipline(s), but only following successful completion of official ISSF courses in each of the disciplines. Normally, No. 5 (Target Control) is combined with the shooting disciplines No. 1 (Rifle), No. 2 (Pistol) and No. 4 (Running Target). However, No. 6 (Electronic Scoring Target Control) is only issued after successful completion of an official ISSF course on that specific subject.

1.5 The ISSF Headquarters and the Chairman of the Judges Committee maintain a list of all the license holders. Every year the names of the new license holders will be published in the ISSF News.

Copyright: ISSF

1.6 License holders may only act as Jury Members for the Olympic Games and the World Championships if they have been designated by the Executive Committee of the ISSF. For World Cups Jury Members will be nominated by the ISSF Secretary General and the Chairman of the ISSF Judges Committee, and designated by the Executive Committee. For Continental and Regional Games and Championships they must be designated by the Continental or Regional Confederations, who in turn must forward this designation to the ISSF for ratification and authorization. Continental and Regional designations must have full endorsement prior to the event to ensure official recognition has been granted.

2 ACQUISITION OF A LICENSE

2.1 The applicant must have the necessary capability and experience as judge.

2.2 ISSF Judges' licenses are not granted to active athletes who still participate in competitions where world records may be established. If the holder of a judge's license wishes to participate as an athlete, he must return the license to the ISSF Headquarters for cancellation. He may apply for a new license.

2.3 For the acquisition of an ISSF Judge's license, preparatory instruction and training is necessary. The applicants should possess a national judge's license of the highest level issued by their National Federation, or must have equivalent experience as a national judge and as a range official. For acquisition of a Judge's license in the shotgun discipline, applicants must first be in possession of a valid Shotgun Referees license.

2.4 Applicants must also have achieved the pass-standard in the General Aspects and the Shooting Discipline Parts of an official ISSF Judges' course within the last four (4) years.

2.5 An applicant's National Federation must sign the completed official ISSF Judges' application form (see form at end of Guidelines) to confirm the contents and support the application. The National Federation must then send it to the ISSF Headquarters.

2.6 Applications should be submitted as soon as possible, but no later than 31 December each year for licenses to be issued in the following year. In order that applicants are not disadvantaged by any time considerations, once applications are received by ISSF Headquarters, the Chairman of the Judges' Committee will endeavour to authorize the issue of licences or upgrades as soon as possible. This does not negate the requirement for the Judges' Committee to approve and confirm the granting of these licences at their annual meeting in January.

2.7 The ISSF Judges Committee will evaluate and approve, where appropriate or postpone applications during its annual meeting which will usually be held towards the end of January each year (see ISSF Constitution).

EDITION 2017 | Second Print 01/2018
Copyright: ISSF

2.8 After approval, the ISSF Headquarters will issue the licenses. To be valid they must be signed by the ISSF Secretary General and the Chairman of the ISSF Judges Committee.

2.9 These licenses are sent to the National Federations for delivery to the license holders.

2.10 A fee of Euro 20.00 must be paid for a new license.

2.11 Approval of initial applications will result in the issue of a “B” category license. Category “A” licenses are only issued following further experience and upgrading.

3 VALIDITY AND EXTENSION OF THE LICENSE

3.1 All ISSF Judges' licenses are issued for a period of four (4) years.

3.2 After expiration of this period, the license can be renewed.

3.3 The National Federation must submit all requests for renewal to the ISSF Headquarters accompanied by a completed Renewal Form (see form at end of Guidelines).

3.4 The National Federation must confirm that the applicant has obtained experiences as a Jury Member in international, regional or national level competitions during the last four (4) years period.

3.5 The current license should not be returned when applying for a renewal, though it will cease to be valid after the expiry date. Applications for renewal should be submitted at least three (3) months before expiry.

3.6 The Chairman of the Judges Committee in cooperation with the ISSF Headquarters will deal with all renewals. Renewed licenses will be returned to the National Federation.

3.7 A fee of Euro 15.00 will be charged for each renewal.

4 EXPIRATION OF A LICENSE

4.1 When an ISSF Judge’s license expires after four (4) years, license holders will be taken off the ISSF list if not renewed by application within two (2) years. In such a case any future license must be applied for in accordance with the acquisition of a license, including attendance at course(s). Licenses renewed late within the two (2) years will only be valid for four (4) years from the previous expiry date.

4.2 The license holder's National Federation, at any time, has the right to apply for cancellation of an ISSF Judge's license. The license holder may be taken off the list, in such a case the license should be returned to the ISSF.

Copyright: ISSF

4.3 A judge's license may be cancelled if a holder does not fulfil his duties as a judge or harms the interest or reputation of the ISSF. The holder will be taken off the ISSF list and the license must be returned to the ISSF. All ISSF Judges' licenses remain the property of the International Shooting Sport Federation.

4.4 **Judges' Courses**

4.5 Only courses that have been approved and recognized by the ISSF will be considered as official training courses for judges. Applications for recognition must be submitted to the ISSF Headquarters using the form "Application for Judges Courses" (available from ISSF Headquarters) as soon as possible before the date of the intended course. The application must include:

4.5.1 Where the course will be held;

4.5.2 The dates of the course;

4.5.3 The name(s) of the shooting disciplines that will be covered;

4.5.4 The name(s) of the ISSF "A" license holder(s) proposed to conduct the course (and they must possess a valid "A" license for the discipline(s) concerned). The name of the course coordinator and, if different, of the person who is to conduct the instruction on the General Aspects of the Rules ;

4.5.5 which expenses will be met by the National Organizer;

4.5.6 in which language(s) the course will be conducted;

4.5.7 from which National Federation(s) the Participants will come;

4.6 The basis for ISSF Judges' courses is the ISSF Training Guidelines. A copy of this document will be issued by the ISSF to the course coordinator of every approved course. The objective is to ensure that applicants for ISSF "B" licenses have a proper understanding of the Rules, and their application, in respect of the disciplines for which they seek to be licensed; also to ensure applicants have a proper understanding of the Constitution, General Regulations, Terms of Reference, Eligibility and Anti-Doping Regulations, etc applicable to all disciplines. Separately, applicants for licenses must possess practical experience gained from officials' duties within their National Federation. Normally, applicants for ISSF Judges' courses should already possess the highest National license as a range official; where nations do not have a national license system the applicants must possess equivalent practical experience.

4.6.1 Every part of the course should be opened with the explanation of the purpose and the content of the course, followed by the duties and decision making processes required to make a good judge.

4.6.2 During the course the ISSF General Regulations and Constitution of the ISSF, etc… must be covered and a test conducted.

EDITION 2017 | Second Print 01/2018
Copyright: ISSF

4.6.3 The “Rifle” discipline must also include 50m and 10m Pistol shooting.

4.6.4 If a separate course is held for 25m Pistol shooting, 10m and 50m Pistol shooting must also be included.

4.6.5 Shotgun, Running Target and Electronic Scoring Target disciplines are treated separately.

4.7 The name of the instructor(s) must be submitted to the ISSF and confirmed. The Organizer can propose instructors to the ISSF for approval, or can request that suitable instructors be provided. The instructors must be highly qualified, be holders of a valid ISSF “A” license and have regularly conducted and delivered previous courses. Instructors should have attended and passed the ISSF “A” Licence Instructors Workshop and where deemed appropriate acted as an assistant instructor prior to appointment themselves.

4.7.1 When there is only one (1) instructor, the different disciplines must be dealt with in succession. This must be done according to a training schedule so that the participants can become familiar with the content of a course and can make arrangements for participating in the different sections.

4.7.2 If there are instructors for the various disciplines the opening of the course, and lectures on the Constitution and the General Regulations, should be given to everyone together. The participants can then separate for the individual disciplines.

4.7.3 The organizer must pay the costs for travelling, accommodation, meals and local transportation for the instructor(s).

4.8 Courses should last a minimum of two (2) days and this should be extended if several disciplines are to be treated in succession.

4.9 The organizer is responsible for providing a training room with adequate facilities for efficient instruction, and for the comfort of those attending.

4.10 A maximum of 15 participants should be admitted to each discipline per instructor. To make the course cost effective it is recommended that at least 12 participants should attend.

4.10.1 The participants should possess a good background of practical experience as officials before attending a course. Participants with little experience must obtain practical experience under the guidance of an experienced judge in a series of national competitions before applying for an ISSF Judge’s license.

4.10.2 The organizer should publish details of the course as early as possible. The announcement should include all details about dates, times, accommodation, meals, local transportation, costs and any further important information.

Copyright: ISSF

4.10.3 Every participant must be given a registration form to be filled in with his name, address and date of birth. The participant must further indicate his experience and any special knowledge he has acquired during competitions in which he acted as an official, and the qualifications obtained in his National Federation.

4.10.4 Only participants entered by a National Federation will be accepted. Inexperienced people should not be allowed to participate.

4.11 Participants who complete the course satisfactorily, including knowledge of the General Aspects will be issued with an ISSF Diploma. ISSF certificates of attendance will not be issued, but organizers are encouraged to provide host Federation certificates of attendance for those not achieving the Diploma standard.

4.12 The ISSF Diploma does not guarantee the issue of an ISSF license; it only certifies the satisfactory completion of the official course.

4.13 At the end of the course the instructor must write and submit a short report, using the form “Report Official ISSF Judges Course” with a list of those attending and those completing the course to the standard required for an ISSF license (i.e. those having received a Diploma), stating for which disciplines the Diploma is valid. Where possible the report should indicate whether the individuals already possess sufficient practical experience, or whether further practical experience appears appropriate before an ISSF license is granted. The report must be sent as soon as possible to the ISSF Headquarters for the attention of the ISSF Secretary General and the Chairman of the ISSF Judges Committee.

4.14 Official recognition of judges’ courses will be decided by the ISSF Secretary General and the Chairman of the ISSF Judges Committee.

4.15 National Shooting Federations are encouraged to run courses for national judges' licenses, but these cannot be recognized as official ISSF courses.

4.16 National Federations not having suitably qualified ISSF license holders to conduct courses for National judges' licenses are also encouraged to request assistance from the ISSF Secretary General or the Chairman of the ISSF Judges Committee.

5 UPGRADING

5.1 The basis for upgrading of a “B” judge's license to an “A” judge's license is the experience acquired as judge over a number of years:

5.1.1 A minimum period of four (4) years recent experience is required as an active “B” license holder; And

EDITION 2017 | Second Print 01/2018
Copyright: ISSF

5.1.2 The applicant must have officiated in at least five (5) international competitions which have a minimum of five (5) participating nations. On at least two (2) occasions the applicant must have been a Jury Member, and exceptionally, on special request, the other three (3) occasions must have been as a Chief Range Officer, Chief Referee, RTS Chief or Chief of Equipment Control. An upgrading based only on the required period of time, but on inadequate further experience at championships, will not be granted; And

5.1.3 For Rifle, Pistol and Running Target disciplines “A” license upgrades, the applicant must be in posession of a valid ISSF EST license.

5.2 The Judges Committee of the ISSF will decide on the upgrading applications at its annual meeting. Accordingly, applications for upgrading should be made to the ISSF Headquarters no later than 31 December annually.

5.3 When an upgrading is approved, the ISSF Headquarters will issue a new ISSF license and this will be sent to the National Federation in the same way as for other license issues.

5.4 A fee of Euro 15.00 is charged for an upgrading.

5.5 Additional disciplines will only be added to an existing license (“A” or “B”) after the recent satisfactory completion of an official ISSF course for that discipline. Applications will be dealt with in the same way as applications for new licenses (as opposed to renewals) by the ISSF Judges Committee at its annual meeting. Those approved will receive new licenses. Where an “A” license is already held, the additional discipline will be added at that level.

6 SPECIAL ADMINISTRATIVE PROCESS FOR THE ISSUANCE OF JUDGES’ LICENSES

6.1 In exceptional cases an ISSF Judge’s license can be issued or upgraded when it is necessary to ensure there are sufficient qualified personnel at events where world records may be established. For example when a change of venue is necessary, or when any change of a previously assigned judge is necessary.

6.2 The National Federation must submit an application.

6.3 The applications will be considered and decided by the ISSF Secretary General together with the Chairman of the ISSF Judges Committee.

6.4 Licenses issued in this way will be included in the list of license holders. At the next meeting of the ISSF Judges Committee the Chairman must inform the Committee of any licenses granted in this way.

6.5 Licenses issued in this way must only be given to well qualified individuals. The usual standards must be met; only the administrative process is changed.

Copyright: ISSF

7 ASSIGNMENT OF JUDGES

7.1 The nomination and designation of the Jury Members is made according to the Constitution of the ISSF.

7.1.1 The Secretary General and the Chairman of the Judges Committee of the ISSF will nominate to the Executive Committee the required number of Jury Members and substitutes for World Championships, Olympic Games and for World Cups in accordance with the Guidelines for World Cups. The Executive Committee designates the Juries.

7.1.2 The Continental and Regional Confederations recognized by the ISSF should nominate and designate the Jury Members for their Championships and Games. Where Olympic quota places are distributed, these designations must be endorsed and ratified by the ISSF prior to the start of the event. Only with such ISSF authorization will jury appointments be granted official recognition and status.

7.1.3 The Organizing Committee, or the Organizing Federation, is responsible for the designation of Jury Members for other international championships and national championships held under the ISSF Rules.

7.2 All Jury Members must hold the applicable current ISSF Judge's license for all competitions where world records may be established. From 2018, for all newly appointed Rifle, Pistol and Running Target Jury Members in these competitions, an ISSF "EST" license is required.

7.3 At all other championships held under the ISSF Rules, the Jury Members should hold valid ISSF Judges' licenses.

7.4 In championships where world records may be established, Team Leaders, Officials and Athletes must not be members of a Jury. If possible one (1) Member, but not usually the Chairman, must be from the National Federation organizing the championships. These host nation judges must be approved by the ISSF.

7.5 In all other championships, team officials should not be members of a Jury.

7.6 It is desirable that senior officials participating in the organizing of major competitions should possess an appropriate ISSF license. Particular tasks and duties for which ISSF licenses should be held are: Chief Range Officer, RTS Chief, Chief Referee, Chief of Equipment Control.

7.7 Range Officers, Classification Officers, Referees and Equipment Control Officers should also be encouraged to undertake official training with a view to obtaining ISSF licenses.

7.8 Competition Officials designated by the Organizing Committee must not be members of any Juries at the same championships.

EDITION 2017 | Second Print 01/2018
Copyright: ISSF

8 ELECTRONIC SCORING TARGET COURSES

8.1 Background

8.1.1 Special courses for Electronic Scoring Target (EST) Control licenses were approved by the Executive Committee in 1998. These courses provide education about the underlying principles involved, and the procedure for dealing with score-protests and with scoring problems that may be encountered.

8.1.2 These courses are designed for holders of ISSF Judges' licenses in the shooting disciplines of Rifle, Pistol and Running Target as the scoring and ranking rules for these disciplines must be known already as well as the ISSF Statutes, Rules and Regulations plus the relevant Technical Rules for the shooting disciplines concerned.

8.1.3 Judges' EST Control licenses are of one (1) category – depending upon the category (“A” or “B”) of the shooting discipline license held.

8.1.4 A course fee fixed by the Executive Committee is payable by each student registering for an Official ISSF course for the first time. This covers the preparation of detailed notes issued to students, and the cost of issuing a handbook, plus future updating as EST equipment is improved, and the license when issued.

8.1.5 Students may attend courses on more than one (1) occasion; to update their knowledge and to improve their result to gain an EST license, if they do not already have one; no further fee is payable.

8.2 As for all official ISSF courses, official recognition of judges’ courses for Electronic Scoring Target Control will be decided by the ISSF Secretary General and the Chairman of the ISSF Judges Committee.

8.2.1 Instructors for these courses are chosen from those having achieved a high standard on a previous course and having considerable practical experience.

8.2.2 Assistant Instructors, with similar qualifications, also may be designated depending upon the number of students attending.

8.2.3 An ISSF Test Paper is provided, together with all supporting test material to conduct a Final Test.

8.2.4 The completed Test Papers are returned to the ISSF for formal marking to ensure a uniform standard is set as the basis for the recommendations for EST Licenses.

8.2.5 Students are given an indication of their result after the official marking. On the recommended course program, the answers are discussed with the class, so that students gain a good idea of where they may have been wrong.

8.3 Electronic Scoring Target Control licenses (Category 6)

Copyright: ISSF

8.3.1 The results are provided to the ISSF Judges Committee annually and the issue of licenses is made after a decision by that committee. No specific application is required, and no separate fee is payable.

9 APPLICATION FORMS FOR LICENSES

9.1 To simplify the administration of license issue, the following forms should now be used when applying for a new “B” license, upgrading, or renewal.

9.2 Each application must be accompanied by one (1) recent photograph 3 cm x 2 cm of the applicant or a digital photograph with a resolution of 300 dpi must be sent by the federation concerned. The photograph should have a neutral background.

EDITION 2017 | Second Print 01/2018
Copyright: ISSF

Application for Judge's “B” License

The Federation of		endorses the application of:
	Name of national federation	

Family Name(s)	Given Name(s)

Date of Birth:				Gender:	◯ Women
Day	Month	Year			◯ Men

To be licensed as an ISSF “B” Judge in the following disciplines:					
Please specify if you already hold an ISSF License in any discipline. The number is:					
Rifle	Pistol	Shotgun	Running Target	Paper Target Control	EST (Only if passed official course)
☐	☐	☐	☐	☐	☐

The Applicant has attended official ISSF Judges’ Course(s) as follows:

Discipline	Course Dates	Location	Instructor

This is to certify that the information given is correct, that the applicant has experience as a national judge, and that the photographs are of the applicant.

Signed for the Federation:		Please enclose one recent photo by 3 x 2 cm or send a digital photo (300dpi) to the ISSF Headquarters
Name typed or printed:		

Application for Judge‘s “B” License 2017/V1.1-1

Copyright: ISSF

(Page two of the application for a Judges "B" License)

Disability	
Do you have any physical impairment that would not permit you to perform all the duties required as a judge for the disciplines for which you are requesting a license?	**Yes** ☐ **No** ☐
If Yes, please provide a separate letter describing your disability.	

Language Capability						
Provide an assessment of your language capability in the ISSF languages:						
Language	Speak			Understand		
	Fluent	Well	Basic	Fluent	Well	Basic
English						
Arabic						
French						
German						
Russian						
Spanish						

Applicant's Declaration			
I affirm that all information contained in my application Is true and correct.			
Date:		Signature of Applicant:	

Fee enclosed: Euro 20.00 ☐	
Photograph enclosed ☐	Digital Photo sent to ISSF Headquarters ☐

International Shooting Sport Federation Official Use:

Date Acknowledged and Checked			
Recommended		Not recommended	
Class license		Postponed until	
By	For the Judges Committee	Date	

Rifle	Pistol	Shotgun	Running Target	Paper Target Control	EST (Only if passed official course)
☐	☐	☐	☐	☐	☐

Date of issue		Invoice Number		Dispatched (mailed, given by hand)	

EDITION 2017 | Second Print 01/2018
Copyright: ISSF

Application for Judge's “A” License

The Federation of		endorses the application of:
	Name of national federation	

Family Name(s)	Given Name(s)

Date of Birth:							Gender:	Women
		Day	Month	Year				Men

To be licensed as an ISSF “A” Judge in the following disciplines:					
Current “B” License Number:					
Rifle	Pistol	Shotgun	Running Target	Paper Target Control	EST (Only if passed official course)
☐	☐	☐	☐	☐	☐

The Applicant has been an official ISSF Judge on the following **FIVE** occasions:

	Jury Duties (Rifle etc.)	Event (Competition)	Dates	Location (City/Country)	No of nations Participating
1					
2					
3					
4					
5					

This is to certify that the information given is correct, that the applicant is conversant with the current ISSF Rules, and the two photographs are of the applicant.

Signed for the Federation:		Please enclose one recent photo by 3 x 2 cm or send a digital photo (300dpi) to the ISSF Headquarters
Name typed or printed:		

Application for Judge's “A” License 2017/V1.1-1

Copyright: ISSF

(Page two of the application for a Judges "A" License)

Disability	
Do you have any physical impairment that would not permit you to perform all the duties required as a judge for the disciplines for which you are requesting a license?	**Yes** ☐ **No** ☐
If Yes, please provide a separate letter describing your disability.	

Language Capability						
Provide an assessment of your language capability in the ISSF languages:						
Language	Speak			Understand		
	Fluent	Well	Basic	Fluent	Well	Basic
English						
Arabic						
French						
German						
Russian						
Spanish						

Applicant's Declaration			
I affirm that all information contained in my application Is true and correct.			
Date:		Signature of Applicant:	

Fee enclosed: Euro 15.00 ☐	
Two Photographs enclosed ☐	Digital Photo sent to ISSF Headquarters ☐

International Shooting Sport Federation Official Use:

Date Acknowledged and Checked			
Recommended		Not recommended	
Class license		Postponed until	
By	For the Judges Committee	Date	

Rifle	Pistol	Shotgun	Running Target	Paper Target Control	EST (Only if passed official course)
☐	☐	☐	☐	☐	☐

Date of issue		Invoice Number		Dispatched (mailed, given by hand)	

EDITION 2017 | Second Print 01/2018
Copyright: ISSF

Application for Judge's License Renewal

The Federation of		endorses the application of:
	Name of national federation	

Family Name(s)	Given Name(s)

Date of Birth:							Gender:	Women
		Day	Month	Year				Men

to have the license renewed:					
License Number:		**Class:**	**A**	**B**	
Disciplines:					
Rifle	Pistol	Shotgun	Running Target	Paper Target Control	Electronic Target Control
☐	☐	☐	☐	☐	☐

The ISSF Member Federation confirms that the applicant has obtained experiences as a Jury Member in international, regional or national level competitions during the last four year period.

The applicant has good knowledge of the current ISSF Rules and Regulations.

This is to certify that the information given is correct and the photograph(s) are of the applicant.

Signed for the Federation:		Please enclose one recent photo by 3 x 2 cm **or** send a digital photo (300dpi) to the ISSF Headquarters
Name typed or printed:		

Fee enclosed: Euro 15.00 ☐	
Two Photographs enclosed ☐	Digital Photo sent to ISSF Headquarters ☐

Application for Judge's License Renewal 2017/V1.1-1

Copyright: ISSF

Article 3.12.2.9.1, Annex “S”: Guidelines for Shotgun Referees Licenses

Chapters

1	GENERAL	*105*
2	ACQUISITION OF A SHOTGUN REFEREE’S LICENSE	*105*
3	VALIDITY AND EXTENSION OF THE LICENSE	*106*
4	EXPIRATION OF A LICENSE	*107*
5	SHOTGUN REFEREES’ COURSES	*107*
6	EYESIGHT CERTIFICATES FOR SHOTGUN REFEREES	*109*
7	SPECIAL ADMINISTRATIVE PROCESS FOR THE ISSUANCE OF SHOTGUN REFEREES’ LICENSES	*110*
8	APPLICATION FORMS FOR SHOTGUN REFEREES’ LICENSES AND EYESIGHT	*111*

SPECIAL NOTE:

In the context of this Annex, the word “Referee” refers to an accredited ISSF Shotgun Referee’s license holder.

EDITION 2017 | Second Print 01/2018
Copyright: ISSF

1 GENERAL

1.1 For the achievement of its purposes the International Shooting Sport Federation licenses Shotgun Referees to act at ISSF supervised shooting competitions and to ensure the fair and equal treatment of all competitors (ISSF General Regulations). Referees must be experienced and fully conversant with the current versions of the ISSF Shotgun Rules for the respective events.

1.2 The ISSF issues Shotgun Referees' licenses as confirmation of qualification.

1.3 The ISSF Shotgun Referee's license is of one (1) category and can be issued in the events Trap (T), Double Trap (DT) and Skeet (S), but only following successful completion of an official ISSF Shotgun Referees' Course for all three events.

1.4 The ISSF Headquarters and the Chairman of the Judges Committee maintain a list of all the Shotgun Referee's license holders, in consultation with the Chairman of the Shotgun Committee. Every year the names of the new license holders will be published in the ISSF News.

2 ACQUISITION OF A SHOTGUN REFEREE'S LICENSE

2.1 The applicant must have the necessary capability and experience as a Referee.

2.2 ISSF Shotgun Referees' licenses are not granted to active athletes who still participate in competitions where world records may be established. If the holder of a Shotgun Referee's license wishes to participate as an athlete, he must return the license to the ISSF Headquarters for cancellation.

2.3 For the acquisition of an ISSF Shotgun Referee's license, preparatory instruction and training is necessary. The applicants should possess a national Shotgun Referee's license of the highest level issued by their National Federation, or have equivalent experience as a national Shotgun Referee.

2.4 For the acquisition or renewal of an ISSF Shotgun Referee's license, the applicant must have passed an eyesight test and eye examination.

2.5 An applicant's National Federation must sign the completed official ISSF Shotgun Referees' application form to confirm the contents and support the application. The National Federation must then send it to the ISSF Headquarters with the original eyesight test form. See forms at the end of these Guidelines.

Copyright: ISSF

2.6 Applications should be submitted as soon as possible, but no later than 31 December each year for licenses to be issued in the following year. In order that applicants are not disadvantaged by any time considerations, once applications are received by ISSF Headquarters, the Chairman of the Judges' Committee will endeavour to authorize the issue of licences as soon as possible. This does not negate the requirement for the Judges' Committee to approve and confirm the granting of these licences at their annual meeting in January.

2.7 The ISSF Judges Committee will evaluate and approve appropriate applications, if necessary with help from the ISSF Medical Committee during its annual meeting which will usually be held towards the end of January each year (see ISSF Constitution). Any queries will be referred to the Shotgun Committee.

2.8 After approval, the ISSF Headquarters will issue the Shotgun Referees' licenses. To be valid they must be signed by the ISSF Secretary General and the Chairman of the ISSF Judges Committee.

2.9 These licenses are sent to the National Federations for delivery to the license holders.

2.10 A fee of Euro 20.00 must be paid for a new license.

3 VALIDITY AND EXTENSION OF THE LICENSE

3.1 All ISSF Shotgun Referees' licenses are issued for a period of four (4) years.

3.2 After expiration of this period, the license may be renewed.

3.3 The National Federation must submit all requests for renewal to the ISSF Headquarters accompanied by a completed Renewal Form (see form at end of Guidelines).

3.4 The current license should not be returned when applying for a renewal, though it will cease to be valid after the expiry date. Applications for renewal should be submitted at least three months before expiry.

3.5 The Chairman of the Judges Committee in co-operation with the ISSF Headquarters and the Chairman of the Shotgun Committee and in some cases also with a member of the Medical Committee will deal with all renewals. Renewed licenses will be returned to the National Federation.

3.6 A fee of Euro 15.00 will be charged for each renewal.

EDITION 2017 | Second Print 01/2018
Copyright: ISSF

4 EXPIRATION OF A LICENSE

4.1 When an ISSF Shotgun Referee's license expires after four (4) years, license holders will be taken off the ISSF list if not renewed by application within two (2) years. In such a case any future license must be applied for in accordance with the Acquisition of a license, including attendance at course(s).

4.2 The license holder's National Federation, at any time, has the right to apply for cancellation of an ISSF Shotgun Referee's license. The license holder may be taken off the list, in such a case the license must be returned to the ISSF.

4.3 A Shotgun Referee's license may be cancelled if the eyesight does not meet the standard any longer or if a holder does not fulfil his duties as a Referee or harms the interest or reputation of the ISSF. The holder will be taken off the ISSF list and the license must be returned to the ISSF. All ISSF Shotgun Referees' licenses remain the property of the International Shooting Sport Federation.

5 SHOTGUN REFEREES' COURSES

5.1 Only courses that have been approved and recognized by the ISSF will be considered as official training courses for Shotgun Referees. Applications for recognition must be submitted to the ISSF Headquarters using the form "Application for ISSF Shotgun Referees' Course" (available from ISSF Headquarters) as soon as possible before the date of the intended course. The application must include:

5.1.1 Where the course will be held;

5.1.2 The dates of the course;

5.1.3 The shooting events that will be covered;

5.1.4 The name(s) of the ISSF "A" Judge's license holder(s) proposed to conduct the course (and they must possess a valid "A" license for the event(s) concerned) ;

5.1.5 The expenses that will be met by the National Organizer;

5.1.6 In which language(s) the course will be conducted;

5.1.7 From which National Federation(s) the participants will come;

5.2 The basis for ISSF Shotgun Referees' courses is the **ISSF Shotgun Referees' Training Guidelines** (as prepared and maintained by the Shotgun Committee). The objective is to ensure that applicants for ISSF Shotgun Referees' licenses have a proper understanding of the Rules, and their application, in respect of the events for which they seek to be licensed as Shotgun Referees. Normally, applicants for ISSF Shotgun Referees' courses should already possess the highest National license as a Shotgun official; where nations do not have a national license system the applicants should possess equivalent practical experience.

Copyright: ISSF

5.2.1 Every part of the course should commence with an explanation of the purpose and the content of the course, followed by the duties of a Shotgun Referee.

5.3 The name of the instructor must be submitted to the ISSF and confirmed. The Organizer can propose instructors to the ISSF for approval, or can request that suitable instructors be provided. The instructors must be highly qualified, and be holders of a valid ISSF "A" Judge's license. From January 2017, new instructors who have not already delivered an ISSF Shotgun Referee's Course, are to have attended and passed an ISSF "A" license Instructors Workshop. It is highly recommended that new course instructors act as assistant instructors, for at least one course, prior to being appointed themselves.

5.3.1 When there is only one (1) instructor, the different events must be dealt with in succession. This must be done according to a training schedule so that the participants can become familiar with the content of a course and can make arrangements for participating in the different sections.

5.3.2 If there are instructors for the various events, the opening of the course, should be given to everyone together. The participants can then separate for the individual events.

5.3.3 The Organizer must pay the costs for travelling, accommodation, meals and local transportation for the instructor(s).

5.4 Courses should last a minimum of one (1) day and this should be extended if several events are to be treated in succession.

5.5 The Organizer is responsible for providing a training room with adequate facilities for efficient instruction, and for the comfort of those attending.

5.6 A maximum of 15 participants should be admitted to each event per instructor. To make the course cost effective it is recommended that at least eight (8) participants should attend.

5.6.1 The participants should possess a good background of practical experience as a Shotgun official before attending a course. Participants with little experience must obtain practical experience under the guidance of an experienced Referee in a series of national competitions before applying for an ISSF Shotgun Referee's license.

5.6.2 The Organizer should publish details of the course as early as possible. The announcement should include all details about dates, times, accommodation, meals, local transportation, costs and any other important information.

5.6.3 Every participant must be given a registration form to be filled in with his name, address and date of birth. The participant must indicate his experience and any special knowledge he has acquired during competitions in which he acted as an official, and the qualifications obtained in his National Federation.

EDITION 2017 | Second Print 01/2018
Copyright: ISSF

5.6.4 Only participants entered by a National Federation will be accepted. Inexperienced people should not be allowed to participate.

5.7 Participants who complete the course satisfactorily will be issued with an ISSF Diploma. ISSF certificates of attendance will not be issued, but Organizers are encouraged to provide host Federation certificates of attendance for those not achieving the Diploma standard.

5.8 The ISSF Diploma does not guarantee the issue of an ISSF Shotgun Referee's license; it only certifies the satisfactory completion of the official course.

5.9 At the end of the course the instructor must write and submit a report, using the form "Report Official ISSF Shotgun Referees' Course" with a list of those attending and those completing the course to the standard required for an ISSF Shotgun Referee's license (i.e. those having received a Diploma), stating for which events the Diploma is valid. Where possible the report should indicate whether the individuals already possess sufficient practical experience, or whether further practical experience appears appropriate before an ISSF Shotgun Referee's license is granted. The report must be sent as soon as possible to the ISSF Headquarters for the attention of the ISSF Secretary General and the Chairman of the ISSF Judges Committee.

5.10 Official recognition of Shotgun Referees' courses will be decided by the ISSF Secretary General and the Chairman of the ISSF Judges Committee.

5.11 National Federations not having available suitably qualified ISSF "A" license holders to conduct official ISSF Courses under the terms above are encouraged to request assistance from the ISSF Secretary General or the Chairman of the ISSF Judges Committee.

5.12 National Shooting Federations are encouraged to run courses for national Shotgun Referees' licenses, but these cannot be recognized as official ISSF courses.

6 EYESIGHT CERTIFICATES FOR SHOTGUN REFEREES

6.1 To ensure that Shotgun Referees are able to carry out their duties in a fair and impartial manner, they must have good eyesight. Accordingly, all Shotgun Referees must have passed an eye and vision examination made by an ophthalmologist or other appropriate medical practitioner.

6.2 The form shown at the end of these Guidelines must be submitted with the application for a license. The certificate must not be older than three (3) months when the license application or license renewal application is made.

Copyright: ISSF

6.3 All Shotgun Referees must be in possession of an eyesight certificate, which is not more than two (2) years old, when undertaking the duties of a Shotgun Referee at any ISSF competition. Such certificates must be checked by the Chief of Referees before any competition commences.

6.4 **Eyesight Standards**

6.4.1 Visual acuity must be 0.7 (equal to 6/9 and 20/30) or better in each eye with or without correction.

6.4.2 The night vision must not be impaired.

6.4.3 The color vision must be normal.

6.4.4 There must be no diplopia (double vision).

6.4.5 The binocular visual field must be normal.

6.4.6 Diabetes or any pathological eye conditions that may cause a substantial deterioration in visual acuity or visual field within four (4) years must be notified to the ISSF in order to give the ISSF the possibility to require further investigations or to decide a shorter period of license validity.

6.5 In case of any impairment to the vision of any Shotgun Referee, the Referee must not be allowed to undertake duties until his eyesight is again certified to be at least the minimum standard.

7 SPECIAL ADMINISTRATIVE PROCESS FOR THE ISSUANCE OF SHOTGUN REFEREES' LICENSES

7.1 In exceptional cases an ISSF Shotgun Referee's license can be issued when it is necessary to ensure there are sufficient qualified personnel at events where world records may be established. For example when a change of venue is necessary, or when any change of a previously assigned Referee is necessary.

7.2 The National Federation must submit an application.

7.3 The applications will be considered and decided by the ISSF Secretary General together with the Chairman of the ISSF Judges Committee.

7.4 Licenses issued in this way will be included in the list of license holders. At the next meeting of the ISSF Judges Committee the Chairman must inform the Committee of any licenses granted in this way.

7.5 Licenses issued in this way must only be given to well qualified individuals. The usual standards must be met; only the administrative process is changed.

EDITION 2017 | Second Print 01/2018
Copyright: ISSF

8 APPLICATION FORMS FOR SHOTGUN REFEREES' LICENSES AND EYESIGHT

8.1 To simplify the administration of license issue, the attached forms must be used when applying for a Shotgun Referee's license.

8.2 Each application must be accompanied by one (1) recent photograph 3 cm x 2 cm of the applicant or a digital photograph with a resolution of 300 dpi to the ISSF Headquarters. The photograph should have a neutral background.

Copyright: ISSF

Application for Shotgun Referee's License

The Federation of		endorses the application of:
	Name of national federation	

Family Name(s)			Given Name(s)		
Date Of Birth:				Gender:	Woman,
	Day	Month	Year		Men
Please specify if you already hold an ISSF Judge's or Referee's License in any discipline. The number is:					
To be licensed as an ISSF Shotgun Referee in the Trap, Double Trap and Skeet events					
The Applicant has attended official ISSF Shotgun Referees' Course(s) as follows:					
Events	**Course Dates**	**Location**	**Instructor**		
This is to certify that the information given is correct, that the applicant has experience as a national Referee, and that the photographs are of the applicant.					
Signed for the Federation:				Please enclose one recent photo by 3 x 2 cm **or** send a digital photo (300dpi) to the ISSF Headquarters	
Name typed or printed:					

Application for Shotgun Referee's License 2017/V1.1-1

EDITION 2017 | Second Print 01/2018
Copyright: ISSF

(Page two of the application for a Shotgun Referee's License)

Disability	
Do you have any physical impairment that would not permit you to perform all the duties required as a Shotgun Referee for the events for which you are requesting a license?	**Yes** ☐ **No** ☐
If Yes, please provide a separate letter describing your disability.	

Language Capability

Provide an assessment of your language capability in the ISSF languages:

Language	Speak			Understand		
	Fluent	Well	Basic	Fluent	Well	Basic
English						
Arabic						
French						
German						
Russian						
Spanish						

Applicant's Declaration

I affirm that all information contained in my application Is true and correct.

Date:		Signature of Applicant:	

Fee enclosed: Euro 20.00 ☐	
Photograph enclosed ☐	Digital Photo sent to ISSF Headquarters ☐

International Shooting Sport Federation Official Use:

Date Acknowledged and Checked			
Recommended		Not recommended	
Class license		Postponed until	
By	For the Judges Committee	Date	

Trap	Double Trap	Skeet
☐	☐	☐

Date of issue		Invoice Number		Dispatched (mailed, given by hand)	

Application for Shotgun Referee's License 2017/V1.1-1

Copyright: ISSF

Application for Shotgun Referee's License Renewal

The Federation of	Name of national federation	endorses the application of:

Family Name(s)	Given Name(s)

Date of Birth:							Gender:	Women
		Day	Month	Year				Men

to have the license renewed:

License Number:

The ISSF Member Federation confirms that the applicant has obtained experiences as a Shotgun Referee in international, regional or national level competitions during the last four year period.

The applicant has good knowledge of the current ISSF Rules and Regulations.

This is to certify that the information given is correct and the photograph(s) are of the applicant.

Signed for the Federation:		Please enclose one recent photo by 3 x 2 cm **or** send a digital photo (300dpi) to the ISSF Headquarters
Name typed or printed:		

Fee enclosed: Euro 15.00 ☐

Photograph enclosed ☐	Digital Photo sent to ISSF Headquarters ☐

Application for Shotgun Referee's License Renewal 2017/V1.1-1

EDITION 2017 | Second Print 01/2018
Copyright: ISSF

Eyesight Test Form and Certificate

Applicant:s			
Family Name(s)		Given Name(s)	
Date of Birth:			
	Day	Month	Year

Certifying medical practitioner / ophthalmologist:

Name, qualifications and medical specialty (for example: Dr. AB Cook, MD, General Practitioner:)

Name		Address		Email	
Phone		Fax		Mobilephone	

1.	Is the visual acuity 0.7 (6/9 or 20/30) or better on each eye? Yes, without correction ☐ Yes, but only with correction ☐ Corrections: Left: ..... Right:	No ☐
2.	Is there any evidence or history of impaired night vision?	Yes ☐ No ☐
3.	Is there any defect in colour vision? If yes, what kind of defect:	Yes ☐ No ☐
4.	Is there any sign of diplopia?	Yes ☐ No ☐
5.	Are there any defects in the binocular visual field? If yes, attach vision field maps!	Yes ☐ No ☐
6.	Is there any evidence of other ophthalmic pathological conditions or diabetes? If yes, what condition(s):	Yes ☐ No ☐

Medical practitioner's / ophthalmologist's declaration:

I, certify that I have examined the above named person, confirmed his/her identity and that I have correctly answered the questions above.

Date of examination:		Name:		Signature and Stamp:	

National Federation's declaration:

We confirm that the applicant is fully supported by our federation to act as an international Shotgun Referee.

Date of examination:		Name:		Signature and Stamp:	

For ISSF official use only:

Investigation ☐ Rejected ☐ Approved ☐

Eyesight Test Form and Certificate 2017/V1.1-1

Copyright: ISSF

Article 3.12.3.10, Annex “A”: Guidelines for Public Affairs Activities

1 PUBLIC RELATIONS WITH SHOOTING SPORT EQUIPMENT SUPPLIERS

The ISSF relies on the cooperation, collaboration and support from all firms involved in the production and distribution of items of equipments used in the shooting sport. Free facilities for firearms and equipment manufactures to service their products must be made available.

Firms may rent space for displays at venues where ISSF supervised events and meetings are held.

Proposals for promotional and advertisement programs that involve ISSF participation or endorsement can be submitted by firms. Each program requires a specific agreement.

The ISSF may grant a license to use the official emblem of the ISSF. This will permit greater promotion of the shooting sport.

Advertisers' requests, specifying detailed proposals and terms, must be submitted to the ISSF Secretary General, who will present them for consideration by the ISSF Executive Committee.

All income must be deposited in the ISSF accounts.

EDITION 2017 | Second Print 01/2018
Copyright: ISSF

2 PUBLIC RELATIONS WITH MEDIA

The ISSF intends to have the best possible public relations with the press, radio and TV services in order to achieve extensive media coverage of ISSF Championships and events. To support successful media relations, Organizing Committees must coordinate with the ISSF Communication Manager and provide:

- a press room at the shooting ranges with all modern telecommunication systems, free internet service, telephone, duplication facilities and other appropriate resources;
- a responsible person to be in charge of the media;
- areas where interviews and press conferences can be held with officials, athletes and coaches;
- procedures to permit media access to the shooting ranges during the competition for filming and reporting;
- procedures to give media personnel reasonable access to athletes and team leaders.

3 PUBLIC RELATIONS WITH THE COMMUNITY

The ISSF desires to establish good relations with members of the public in all communities where ISSF Championships, events and meetings are conducted.

In all ISSF Championships, events and meetings, the laws, rules and ecological regulations of the community must be respected.

The shooting sport, in the tradition of the Olympic Spirit, must work to create goodwill among all persons.

Further details are available in the “Guidelines for Organizing ISSF Championships” and “Guidelines for the Organization of the Media Work”.

Copyright: ISSF

Article 3.12.3.11, Annex “B”: Guidelines for Media Coverage, Broadcasting and Advertising

1 All details about commercial rights including Media Coverage, Broadcasting and Advertising of all ISSF Championships and other ISSF official events (General Assemblies, Congresses etc.) are the property of the International Shooting Sport Federations and further specified in the “ISSF Eligibility, ISSF Commercial Rights and ISSF Sponsorship/Advertising Rules” within this Rule Book.

2 Details about Media Coverage and Broadcasting can be found in the “Guidelines for the Organization of Media Work” available at ISSF Headquarters.

EDITION 2017 | Second Print 01/2018
Copyright: ISSF

Article 3.12.3.12, Annex “AC”: Athletes Committee

1 AIMS AND OBJECTIVES OF THE ATHLETES COMMITTEE

1.1 To gather information and opinions from athletes on their needs and problems with regard to the Olympic Games and ISSF Championships.

1.2 To voice opinions and make recommendations on these topics and forward them to the relevant bodies of the ISSF.

1.3 To establish contact and coordinate activities with the Athletes Committees of other international federations.

1.4 To participate in working groups, to ensure the best possible conditions for the training, accommodation and living conditions for the athletes as well as for the conduct of the competitions at the major international championships.

1.5 To support the fight against drugs and doping.

1.6 To establish a direct link with the athletes within the ISSF.

2 STRUCTURE

2.1 The ISSF Athletes Committee must be composed of seven (7) members, four (4) of them elected by the athletes participating in the ISSF World Championships which are held every four (4) years and three (3) members appointed by the ISSF Executive Committee.

2.1.1 In addition to the four (4) elected athletes, three (3) additional athletes will be appointed by the ISSF Executive Committee as equal members of the committee in order to guarantee a balance between continents, genders and disciplines.

2.2 The following elections will be held during the World Championships.

2.2.1 The appointment of three (3) additional members by the ISSF Executive Committee will follow in a meeting after the athletes have elected the four (4) committee members.

2.3 To qualify as a candidate, an athlete must never have been found guilty of a doping offence and must have participated in either the last Olympic Games or in the previous or present World Championships.

Copyright: ISSF

2.4 The Chairman of the ISSF Athletes Committee will be elected by the ISSF Executive Committee in its meeting following the election of the committee members.

2.5 The term of office is four (4) years, and all members may be re-elected. A member can serve on the committee for no longer than four (4) years after his/her retirement from international competition.

2.6 The Chairman will become a member of the Executive Committee and will participate in all meetings of the Executive Committee as a representative of the athletes with full voice and vote.

2.7 The ISSF Athletes Committee may hold one (1) or two (2) meetings per year.

3 ELECTION PROCEDURE

3.1 The ISSF Member Federations may present a candidate for the ISSF Athletes Committee according to the Guidelines to the Constitution, but not earlier than two (2) months before and not later than 15 days before the day of the opening ceremony of the World Championships.

3.2 The ISSF Headquarters will establish a list of all nominated candidates including a brief biography. This list will be published on the ISSF website.

3.3 With the accreditation of all participating athletes in the World Championships, each athlete entered in the men or women categories will be issued a voting paper showing all candidates and the information on the voting procedure.

3.4 Each athlete may only vote for a maximum of four (4) candidates from the voting ballot.

3.5 The four (4) athletes, who have received the highest number of votes, will be considered elected as members of the ISSF Athletes Committee.

4 APPOINTMENT OF THREE ADDITIONAL MEMBERS

4.1 The ISSF Executive Committee will appoint three (3) additional members to the Athletes Committee at its next meeting following the election of athletes.

4.2 The appointment will be conducted by a selection using the list of all candidates for the election.

4.3 In the same meeting, the Executive Committee shall elect the Chairman of the Athletes Committee.

EDITION 2017 | Second Print 01/2018
Copyright: ISSF

5 FINANCIAL SITUATION OF THE COMMITTEE

5.1 In general, the ISSF Member Federation that nominated the elected member has the responsibility of supporting the athlete's participation in committee meetings according to the Guidelines to the Constitution.

5.2 The ISSF Executive Committee will decide on any financial support for the purpose of the meeting and will fix the amount of the daily allowance for each athlete participating in the meeting.

6 METHOD OF COMMUNICATION

6.1 There will be an official website for the ISSF Athletes Committee within the framework of the ISSF website. The internet can be one of the communication tools.

6.2 Announcements will be made in the ISSF NEWS magazine.

7 REMARKS

7.1 Athletes elected or appointed to the Athletes Committee must be aware of their responsibilities as representatives of the athletes.

7.2 They must make every effort to attend all meetings.

7.3 They should be motivated to contribute to the shooting sport and the Olympic Movement.

7.4 They should also be responsible for the education of young athletes.

7.5 They should be educated in respect of positions as representatives, or officials, in both international and national federations during the duration of their appointment as members of the Athletes Committee.

Copyright: ISSF

4. ISSF ELIGIBILITY, ISSF COMMERCIAL RIGHTS AND ISSF SPONSORSHIP / ADVERTISING RULES

EDITION 2017 | Second Print 01/2018
Copyright: ISSF

Chapters

4.1 ELIGIBILITY OF ATHLETES *124*

4.2 ISSF COMMERCIAL RIGHTS *126*

4.3 SPONSORSHIPS AND ADVERTISING *127*

4.4 IDENTIFICATIONS ON ATHLETES' EQUIPMENT, CLOTHING, ACCESSORIES AND FOOTWEAR *128*

4.5 RULES FOR MANUFACTURER IDENTIFICATION *129*

4.6 RULES FOR SPONSOR MARKINGS *130*

4.7 CONTROLS AND SANCTIONS *131*

4.8 APPROVAL *131*

NOTE:

Where figures and tables contain specific information, these have the same authority as the numbered rules.

VERY IMPORTANT NOTE:

Please be aware that for the Olympic Games, IOC Rule 50, Advertising, Demonstrations and Propaganda, and the accompanying publication "Guidelines Regarding Authorised Identifications" apply!

Copyright: ISSF

4.1 ELIGIBILITY OF ATHLETES

4.1.1 The ISSF Eligibility Rules specify the conditions under which athletes are eligible to participate in ISSF Championships (see ISSF General Regulations). These Eligibility Rules must be applied strictly in all ISSF Championships.

4.1.2 The ISSF recognizes Rule 40 (Participation in the Olympic Games), Rule 41 (Nationality of Competitors) and Rule 50 (Advertising, Demonstrations and Propaganda) of the Olympic Charter and their corresponding Bye-Laws as basic documents for the ISSF Eligibility Rules.

4.1.3 To be eligible to participate in ISSF Championships, an athlete must be entered in the Championship in accordance with Article 3.6 of the ISSF General Regulations by his/her National Federation, which must be an ISSF Member Federation in good standing. For the Olympic Games or Continental Games it is the respective NOC that enters the athlete. The athletes entered must:

4.1.3.1 be selected to participate in accordance with procedures established by the athlete's National Federation, except that athletes entered in the Olympic Games also must comply with the “Special Regulations for the Participation in the Shooting Sport Events of the Olympic Games” (Annex “Q”, ISSF General Regulations);

4.1.3.2 be a national of the country they represent in accordance with the Olympic Charter and ISSF General Regulations;

4.1.3.3 not have been guilty of improper or unsportsmanlike conduct, particularly through the use of doping, violence, racism and irregular or illegal betting activities;

4.1.3.4 not have violated ISSF rules for sponsorship or advertising as specified in these Rules.

4.1.4 Athletes who compete in ISSF Championships may accept, directly or indirectly, money payments or other prizes as awards or as an inducement to take part in a competition, except that no athlete's participation in the Olympic Games may be conditional on any financial consideration (Olympic Charter, Bye-law to Rule 40).

4.1.5 An athlete who knowingly takes part in a competition vetoed by the ISSF may be excluded from ISSF Championships for a prescribed period by the Executive Committee.

4.1.6 A National Federation that enters an athlete in an ISSF Championships who is excluded from competition in accordance with ISSF Anti-Doping Regulations or other ISSF Rules shall lose all its privileges except the right to be represented at the next General Assembly.

EDITION 2017 | Second Print 01/2018
Copyright: ISSF

4.1.7 Athletes from a nation with a suspended National Federation may participate in ISSF Championships upon decision of the Executive Board, but they must compete as Independent Shooting Participants (ISP) under the ISSF flag, not the flag of their nation.

4.1.8 Where the eligibility of a female athlete is questioned due to possible hyperandrogenism, and a formal written request has been made to do so, an Expert Panel comprised of members of the ISSF Medical Committee and other experts shall be appointed to evaluate a suspected case of female hyperandrogenism. In so doing, the ISSF Medical Committee shall generally and substantially follow the IOC criteria and/or IOC Rules which deal with possible hyperandrogenism and are in effect at the time of the request.

4.1.9 Any athlete who undergoes sexual reassignment surgery after puberty and wishes to participate in an ISSF Championship must meet the specific conditions and criteria established by the IOC in order to do so. The request to participate in ISSF Championships after sexual reassignment surgery must be made by the athlete to the ISSF Medical Committee prior to competing and the ISSF Medical Committee and other experts shall determine whether or not the IOC criteria has been met.

4.1.10 Any determination made under article 4.1.7 or article 4.1.8 may be appealed exclusively to the International Court of Arbitration for Sport.

4.1.11 In order to help protect the dignity and privacy of the athlete concerned, requests for investigations, information gathered during investigations, results of investigations and decisions regarding a case (or potential case) of female hyperandrogenism or a case involving a transexual athlete shall be kept confidential and not released or made public by the ISSF.

Copyright: ISSF

4.2 ISSF COMMERCIAL RIGHTS

4.2.1 OWNERSHIP AND EXPLOITATION OF COMMERCIAL RIGHTS

In accordance with the ISSF General Regulations (3.12.3.11), the ISSF is the sole holder of broadcasting, licensing, marketing, merchandising, and equipment rights, and other rights associated with ISSF Championships and other ISSF official events (General Assemblies, Congresses, etc.), with the exception of the Olympic and Continental Games.

For ISSF Championships with the exception of the Olympic and Continental Games, the ISSF has the right to sell its broadcasting and marketing licensing, merchandising, and equipment rights.

The ISSF may decide to assign part of these rights to the organizers of an ISSF Championship on the basis of these guidelines either for a fee or without cost. In such instances, the event organizer and the ISSF must agree on the terms of such agreement.

4.2.2 ISSF LOGO

The ISSF logo is the sole property of the ISSF. Its use requires prior approval by the ISSF. All details concerning the exact look, color, fonts and usage of the ISSF logo is described in the Guidelines *"ISSF Corporate Identity and Design"* which is available from the ISSF Headquarters.

4.2.3 BROADCASTING AND OTHER MEDIA RIGHTS

Rights include but are not limited to the transmission (live, delayed, or highlights) of visual images (together with any sound transmission for reception in conjunction with those images) to conventional domestic or home television receivers or such yet to be invented devices through which the images will be broadcast or distributed. Such media includes also, but is not limited to, radio, highlight programs, on-line and internet rights, archive, and news access as well as transmission to mobile devices.

ISSF has created its own website and will exploit commercial and communication opportunities through this and other electronic devices, including those yet to be developed or invented.

EDITION 2017 | Second Print 01/2018
Copyright: ISSF

4.2.4 MARKETING RIGHTS AND ADVERTISING RULES

These rules apply to all official parts of ISSF Championships (training and competition, opening, closing and award ceremonies).

Marketing rights include all marketing, licensing and/or merchandising rights available or yet to be invented for a sport competition. The sale of these rights includes advertising and other appropriate benefits.

Sponsor markings on signs, banners, posters or other material may be displayed on athlete's clothing and equipment on the ranges and on other facilities at ISSF Championships, if such sponsor markings are in accordance with these Regulations.

During the Olympic Games, no advertising with signs, banners, posters or other means is permitted unless such advertising is authorized by IOC Rules, in particular by the Advertising, Demonstrations, Propaganda Code of the Olympic Charter Rule. For the Olympic Games, sponsor markings are not permitted and must be removed or covered if possible with the same material and color providing it continues to meet ISSF Rules for thickness and stiffness.

4.2.5 ON-SITE ADVERTISING

Advertising on the ranges of ISSF Championships may not be placed in the target areas in such a way that it interferes with the sight pictures of the athletes.

The ISSF reserves the right to control sponsor signs at the main entrance of ISSF Championship ranges, official scoreboards, and official score monitors, target frames and Bib Numbers.

The site planning and the sizes of the above advertising spaces require prior approval of the ISSF.

All or part of the available spaces may be contracted to one (1) advertising agency as a package. If an agency is decided upon, the Secretary General must transmit the name of the agency and details of the contract to the organizing country's Member Federation three (3) months before the ISSF Championship or official event.

All other available advertising spaces are the property of the organizer.

4.3 SPONSORSHIPS AND ADVERTISING

4.3.1 A sponsorship is any contract-based support of an athlete or organization provided to the athlete in the form of money, goods or services.

4.3.2 These rules apply to all official parts of ISSF supervised Championships events (training and competition, opening, closing and award ceremonies).

Copyright: ISSF

4.3.3 A National Federation may enter into a contract with a commercial firm or organization for sponsorships, the provision of equipment or advertising.

4.3.4 An individual athlete may enter into a contract for an individual sponsorship with a commercial firm or an organization.

4.3.5 These contracts must respect the rules of the National Federations and the ISSF.

4.3.6 Sponsorship contracts may authorize the pictures, names or athletic performances of athletes to appear in the advertisements of contracting commercial firms.

4.3.7 Payments to individual athletes under such contracts may be made either to the athlete or the National Federation.

4.4 IDENTIFICATIONS ON ATHLETES' EQUIPMENT, CLOTHING, ACCESSORIES AND FOOTWEAR

4.4.1 Trademark

A trademark is a distinctive name, symbol, motto, or design that legally identifies a company or its products and services, in order to distinguish them from those offered by others.

4.4.2 Commercial Identification

,A commercial identification is any visible occurrence of a trademark or an advertising sign on an item of equipment, accessories, clothing and footwear used during the competition. There are two (2) types of commercial marking:

4.4.3 Manufacturer Identification

A manufacturer identification is a display of the manufacturer name or of a trademark on a product made by the manufacturer (trademark owner) with the aim to identify the product and/or its origin.

4.4.4 Product Technology Identification

The Product Technology Identification means the technical identification (which shall not include any Manufacturer Identification or parts thereof) used on an item of equipment to identify fabric or any technology used in development and manufacturing of the equipment item used.

4.4.5 Sponsor Identification

A sponsor marking is any advertising sign on a product different from a manufacturer identification or a Product Technology Identification.

EDITION 2017 | Second Print 01/2018
Copyright: ISSF

4.5 RULES FOR MANUFACTURER IDENTIFICATION

4.5.1 Additional restrictions for ISSF Championships

One (1) manufacturer identification per equipment item / clothing / accessories is allowed. Gun parts are considered to be items of equipment.

No manufacturer or sponsor identification is permitted on the blinder on the rear sight or on the front or attached to the hat, cap, shooting glasses or to the headband.

The IOC enforces special rules for the Olympic Games. Details are stated in the Rule 50 of the Olympic Charter and its Bye-Law.

4.5.2 Measuring Manufacturer Identification

Manufacturer identification may be divided into the following categories:

- the manufacturer name; or
- the manufacturer logo; or
- a combination of the manufacturer name and the manufacturer logo.

Manufacturer identification will be measured as follows:

Regular Shapes. Where the manufacturer identification appears as a rectangle or a square, the mathematical rules used to calculate the surface area of the shape will be applied.

Irregular Shapes. Where the manufacturer identification is an irregular shape, a rectangle will be traced around the entire area of the identification and the mathematical rules used to calculate the surface area of the rectangle shall be applied.

Combined Shapes. Where the manufacturer identification combines the manufacturer name with the manufacturer logo, a rectangle will be traced around the entire area of the identification and the mathematical rules used to calculate the surface area of the rectangle shall be applied.

Copyright: ISSF

4.6 RULES FOR SPONSOR MARKINGS

4.6.1 General Rules for Sponsor Markings

Equipment or goods supplied to a national team must, with reference to manufacturer identification, conform to the specifications in these Rules.

Sponsor markings on bare skin are not allowed.

During training and competition, all items which have the sole purpose of displaying a sponsor marking and/or which are not used in connection with the competition are not allowed.

No pictures or portraits of athletes wearing clothing with commercial markings in contravention those specified in these rules may be used in advertising on the venues during training and competition.

The size and appearance of sponsor markings on items used by the athlete is defined in **Table 1**.

4.6.2 Bib (Start) Numbers

Bib (Start) Numbers may include the commercial marking of ISSF Championship sponsors, provided all competitors use numbers marked similarly. Not more than 150cm² or a maximum of 25% of the Bib (Start) numbers area may be dedicated to the general sponsor marking. The Bib (Start) numbers must display the name, initials and the nation of the athlete. The IOC abbreviation of the nation must be used. The minimum height of the letters should be as big as possible but should not be less than 20 mm.

For Shotgun the IOC abbreviation of the nation of the athlete and his name and first initial in Latin letters must be displayed (IOC abbreviation at the top) at the back of the shoulder area of his outer athlete garment.

EDITION 2017 | Second Print 01/2018
Copyright: ISSF

4.7 CONTROLS AND SANCTIONS

The National Federations, together with the ISSF, are responsible for enforcing ISSF Eligibility and Sponsorship Rules.

ISSF Competition Juries are responsible for enforcing ISSF rules concerning advertising on equipment and clothing in the competition and training areas during ISSF Championships.

In case of a violation, the Jury must issue an oral or written warning. An athlete not complying with this warning must not be permitted to start or to continue in the competition.

Decisions by the Competition Juries concerning infringement of these rules may be appealed to the Jury of Appeal whose decision is **FINAL**.

If an advertiser exploits the use of the name, title, or individual picture of an athlete in connection with any advertisement, endorsement or sale of goods without the approval or the knowledge of the athlete, the athlete may give “power of attorney” to his/her National Federation or to the ISSF to enable them, if necessary, to take legal action against the advertiser in question. If the athlete concerned fails to do so, the ISSF shall judge the situation as if the athlete had given full permission to the advertiser.

4.8 APPROVAL

These Eligibility Rules were amended and approved by the Executive Committee of the ISSF on 7th April 2008 in Beijing, CHN, on 12th November 2012 in Acapulco, MEX, on 24th November 2013 in Munich, GER and on 1st March 2016 in Munich, GER. They replace previous editions of the ISSF Eligibility Rules and become immediately effective 1st January, 2017.

The following rules are part of these ISSF Eligibility Rule and are available on the IOC website.

Olympic Charter Rule 40 - Participation in the Olympic Games – Bye-Law to Rule 40

Olympic Charter Rule 41 – Nationality of Competitors - Bye-Law to Rule 41

Olympic Charter Rule 50 – Advertising, Demonstrations, Propaganda – Bye-Law to Rule 50

Copyright: ISSF

TABLE 1: Special Rules for Sponsor Markings			
	Category/Item	**Applicable Rule**	
	Equipment		
4.6.1.1	Guns	No restrictions apply.	
4.6.1.2	Other Equipment	No restrictions apply for Rifle Slings, Kneeling Rolls, Rifle Stands, Telescope Stands, Spotting Telescopes, Gun Cases, Shooting Bags, Suitcases and Cloth Bags etc.	
	Clothing	**Applicable Rule**	**Other restrictions**
	Competition Clothing		
4.6.1.3	For any of: Outer Shooting Garment (Jacket, Vest, Shirt or Sweat Top etc.)	**Front**: Shoulder and middle area (upper and middle thirds of the torso) max 5 markings (3 sponsors, 1 ISSF emblem and/or 1 National Federation emblem).	The upper position on the left side (right side for left handed athletes) must be reserved for the ISSF emblem. ONE HALF of the left side must be reserved for the National Federation emblem and/or National Federation flag.
4.6.1.4		**Back**: Shoulder area (upper third of torso) NO markings	RESERVED for the name and IOC abbreviation of the nation of the athlete and/or the Bib Number. If a flag of the nation is used it must be placed to the left (when seen by another person) of the IOC abbreviation.
4.6.1.5		**Back**: Middle area (middle third of torso) NO markings	RESERVED for Bib Number only
4.6.1.6		**Front**: Hip area (lower third of torso) max 2 markings	none
4.6.1.7		**Back**: Hip area (lower third of torso) max 3 markings	none
4.6.1.8		Sleeves: max 1 marking	The same identical marking may appear on both sleeves
4.6.1.9	For any of : Trousers, shorts, sweat pants etc.	Trouser legs only: 1 marking	The same identical marking may appear on both legs
4.6.1.10	Skirt	1 marking	none

EDITION 2017 | Second Print 01/2018
Copyright: ISSF

4.6.1.11	**Formal Uniforms** Dress Uniforms	**Applicable Rule** Official dress uniforms may carry the name or trademark of up to five (5) sponsors regulated by the National Federation.	A dress uniform includes all clothing worn by the athlete and the members of the team during all official parts of the Championships, where protocol requires a display of the emblem, name or abbreviation of the national federation on the clothing. The single occurrence of manufacturer identification or product technology identification on a dress uniform item does not count as sponsor marking.
4.6.1.12	**Casual Clothing** Casual Clothing	**Applicable Rule** No restrictions apply.	Includes all clothing worn by the athlete on the competition venues under other circumstances than competing or following the protocol in a dress uniform.
	Accessories	**Applicable Rule**	**Other restrictions**
4.6.1.13	Belt		
	Towel		
	Socks		
	Water Bottle		
	Gloves Eyewear	No restrictions apply.	None
	Shooting Glasses		
	Side Blinders		
	Ear Protection		
	Footwear		
4.6.1.14	Headgear	Front and/or back only for country, national federation emblem, ISSF emblem or emblem of an ISSF competition organizer	None
4.6.1.15	Front / Rear Sight Blinders	No sponsor marking	

Copyright: ISSF

①

SPONSOR MARKINGS (ALL)

FRONT of Outer Garment (*shown for Right handed shooter*)

NO SIZE RESTRICTIONS

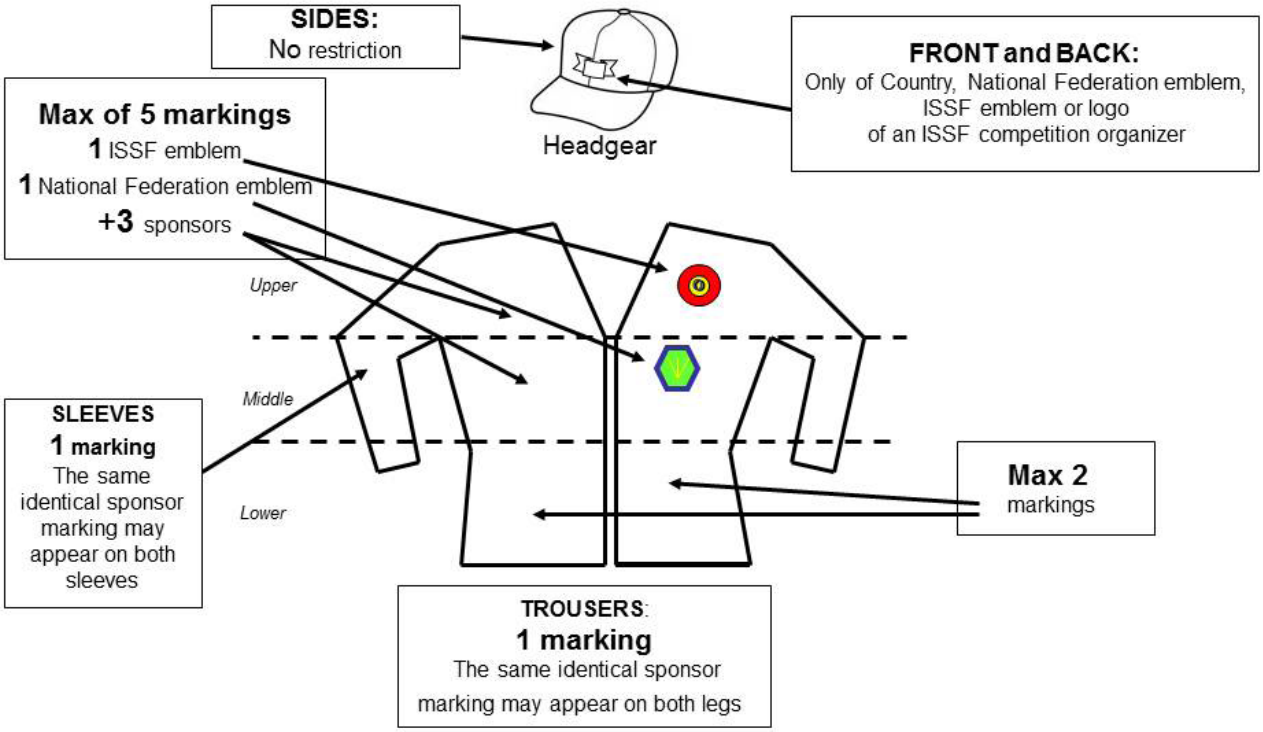

EDITION 2017 | Second Print 01/2018
Copyright: ISSF

SPONSOR MARKINGS

②

ALL EXCEPT SHOTGUN

BACK of Outer Garment

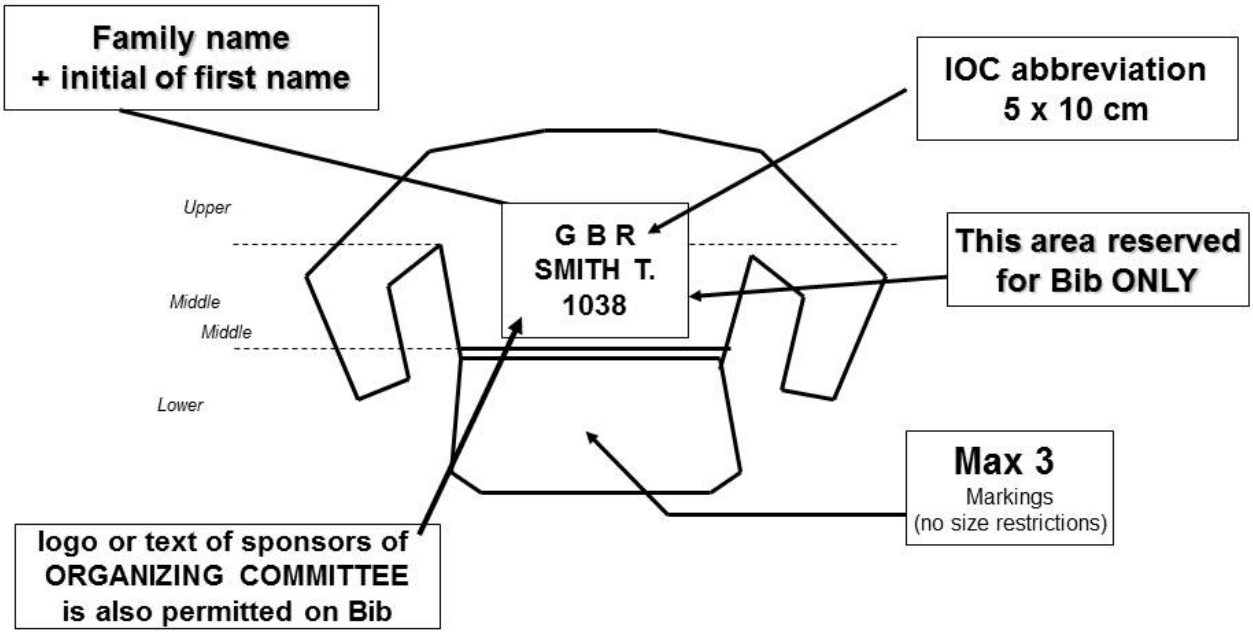

Copyright: ISSF

SPONSOR MARKINGS

3

SHOTGUN ONLY

BACK of Outer Garment

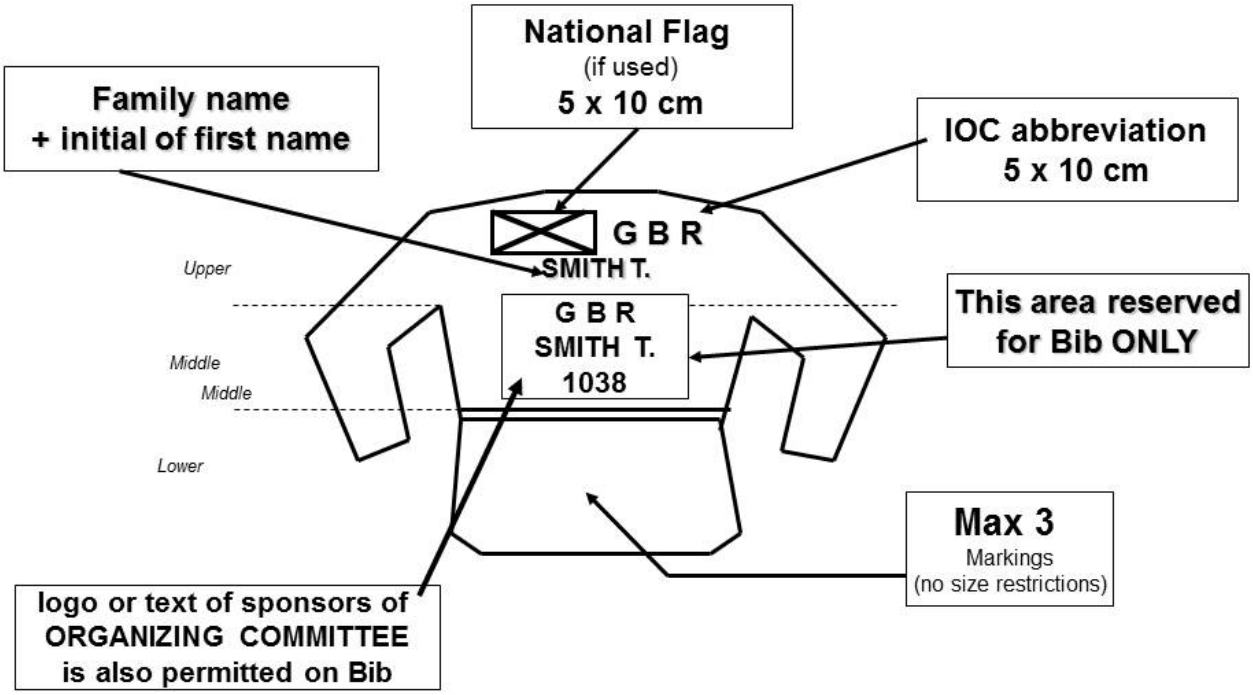

EDITION 2017 | Second Print 01/2018
Copyright: ISSF

Copyright: ISSF

5. ISSF ANTI-DOPING REGULATIONS

EDITION 2017 | Second Print 01/2018
Copyright: ISSF

Chapters

1	DEFINITION OF DOPING	*143*
2	ANTI-DOPING RULE VIOLATIONS	*144*
3	PROOF OF DOPING	*147*
4	THE PROHIBITED LIST	*149*
5	*TESTING* AND INVESTIGATIONS	*152*
6	ANALYSIS OF *SAMPLES*	*156*
7	RESULTS MANAGEMENT	*158*
8	RIGHT TO A FAIR HEARING	*164*
9	AUTOMATIC *DISQUALIFICATION* OF INDIVIDUAL RESULTS	*166*
10	SANCTIONS ON INDIVIDUALS	*166*
11	*CONSEQUENCES* TO TEAMS	*175*
12	SANCTIONS AND COSTS ASSESSED AGAINST SPORTING BODIES	*176*
13	APPEALS	*177*
14	ISSF RIGHT OF REVIEW	*181*
15	CONFIDENTIALITY AND REPORTING	*182*
16	APPLICATION AND RECOGNITION OF DECISIONS	*185*
17	INCORPORATION OF THE ISSF'S ANTI-DOPING RULES AND OBLIGATIONS OF *NATIONAL FEDERATIONS*	*186*
18	STATUTE OF LIMITATIONS	*186*
19	ISSF Compliance Reports to *WADA*	*186*

NOTE:

For the purpose of the ISSF Official Statutes and Regulations the ISSF Anti-Doping Rules remain Article 5 of the ISSF General Regulations.

In order to simplify the reading format and comprehension of the Anti-Doping Rules, the Chapters are simply numbered from 1-23.

Copyright: ISSF

20 EDUCATION ***187***

21 AMENDMENT AND INTERPRETATION OF ANTI-DOPING RULES ***187***

22 INTERPRETATION OF THE *CODE* ***188***

23 ADDITIONAL ROLES AND RESPONSIBILITIES OF *ATHLETES* AND OTHER *PERSONS* ***189***

APPENDIX 1. DEFINITIONS ***191***

APPENDIX 2. EXAMPLES OF THE APPLICATION OF ARTICLE 10 ***198***

EDITION 2017 | Second Print 01/2018
Copyright: ISSF

Introduction

Preface

These Anti-Doping Rules are sport rules governing the conditions under which sport is played. Aimed at enforcing anti-doping principles in a global and harmonized manner, they are distinct in nature from criminal and civil laws, and are not intended to be subject to or limited by any national requirements and legal standards applicable to criminal or civil proceedings. When reviewing the facts and the law of a given case, all courts, arbitral tribunals and other adjudicating bodies should be aware of and respect the distinct nature of these Anti-Doping Rules implementing the *Code* and the fact that these rules represent the consensus of a broad spectrum of stakeholders around the world as to what is necessary to protect and ensure fair sport.

The first ISSF Anti-Doping Rules were approved by the ordinary General Assembly of the UIT (ISSF) on October 30, 1982 in Caracas, Venezuela and were modified as needed and required by decisions of the Administrative Council since that time. These Anti-Doping Rules are therefore adopted and implemented in conformity with the ISSF's responsibilities under the World Anti-Doping Code (the "Code") and are a furtherance of the ISSF's continuing efforts of eradicating doping in shooting sport.

Copyright: ISSF

Fundamental Rationale for the code and the ISSF Anti-Doping Rules

Anti-doping programs seek to preserve what is intrinsically valuable about sport. This intrinsic value is often referred to as "the spirit of sport". It is the essence of Olympism, the pursuit of human excellence through the dedicated perfection of each person's natural talents. It is how we play true. The spirit of sport is the celebration of the human spirit, body and mind, and is reflected in values we find in and through sport, including:

- Ethics, fair play and honesty
- Health
- Excellence in performance
- Character and education
- Fun and joy
- Teamwork
- Dedication and commitment
- Respect for rules and laws
- Respect for self and other *Participants*
- Courage
- Community and solidarity

Doping is fundamentally contrary to the spirit of sport.

The ISSF and each of its *Member Federations ("National Federations")* are dedicated to preventing the intentional or unintentional use of Prohibited Substances and Methods in shooting sport and shall, within their means and in cooperation with each other, other Code Signatories and the World Anti-Doping Agency, plan, implement, evaluate and monitor information and education programs for doping-free sport at all levels in order to preserve the spirit of sport.

EDITION 2017 | Second Print 01/2018
Copyright: ISSF

Scope

- These Anti-Doping Rules shall apply to ISSF and to each of its *National Federations.*

- These Anti-Doping Rules shall also apply to the following *Athletes, Athlete Support Personnel* and other *Persons*, each of whom is deemed, as a condition of his/her membership, accreditation and/or participation in ISSF or its National Federations, or their activities or *Events or Competitions*, to have agreed to be bound by these Anti-Doping Rules, and to have submitted to the authority of ISSF to enforce these Anti-Doping Rules and to the jurisdiction of the hearing panels specified in Article 8 and Article 13 to hear and determine cases and appeals brought under these Anti-Doping Rules:

  a) All *Athletes* and *Athlete Support Personnel* who are members of ISSF, or of any *National Federation*, or of any member or affiliate organization of any *National Federation* (including any clubs, teams, associations or leagues);

  b) *National Federations*, their Athletes and all individuals competing, participating or implicated in any international, continental, regional, or national shooting *Events* or *Competitions* organized, convened, authorized, recognized or regulated by Annex A of the ISSF Constitution (hereinafter collectively referred to as ISSF "*Events*").

  c) Any other *Athlete* or *Athlete Support Personnel* or other *Person* who, by virtue of an accreditation, a license or other contractual arrangement, or otherwise, is subject to the jurisdiction of the ISSF or of any *National Federation*, or of any member or affiliate organization of any *National Federation* (including any clubs, teams, associations or leagues), for purposes of anti-doping;

Within the overall pool of *Athletes* set out above who are bound by and required to comply with these Anti-Doping Rules, the following *Athletes* shall be considered to be *International-Level Athletes* for purposes of these Anti-Doping Rules, and therefore the specific provisions in these Anti-Doping Rules applicable to *International-Level Athletes* (as regards *Testing* but also as regards to *TUEs*, whereabouts information, results management, and appeals) shall apply to such *Athletes*:

- All *Athletes* who hold an ISSF ID, and,

- All *Athletes* who have qualified for or intend to compete at an ISSF *Event*, or a *Major Event Organizer's Event*.

1 DEFINITION OF DOPING

Doping is defined as the occurrence of one or more of the anti-doping rule violations set forth in Article 2.1 through Article 2.10 of these Anti-Doping Rules.

Copyright: ISSF

2 ANTI-DOPING RULE VIOLATIONS

The purpose of Article 2 is to specify the circumstances and conduct which constitute anti-doping rule violations. Hearings in doping cases will proceed based on the assertion that one or more of these specific rules have been violated.

Athletes or other *Persons* shall be responsible for knowing what constitutes an anti-doping rule violation and the substances and methods which have been included on the *Prohibited List*.

The following constitute anti-doping rule violations:

2.1 Presence of a *Prohibited Substance* or its *Metabolites* or *Markers* in an *Athlete's Sample*

2.1.1 It is each *Athlete's* personal duty to ensure that no *Prohibited Substance* enters his or her body. *Athletes* are responsible for any *Prohibited Substance* or its *Metabolites* or *Markers* found to be present in their *Samples*. Accordingly, it is not necessary that intent, *Fault*, negligence or knowing *Use* on the *Athlete's* part be demonstrated in order to establish an anti-doping rule violation under Article 2.1.

2.1.2 Sufficient proof of an anti-doping rule violation under Article 2.1 is established by any of the following: presence of a *Prohibited Substance* or its *Metabolites* or *Markers* in the *Athlete's* A *Sample* where the *Athlete* waives analysis of the B *Sample* and the B *Sample* is not analyzed; or, where the *Athlete's* B *Sample* is analyzed and the analysis of the *Athlete's* B *Sample* confirms the presence of the *Prohibited Substance* or its *Metabolites* or *Markers* found in the *Athlete's* A *Sample*; or, where the *Athlete's* B *Sample* is split into two bottles and the analysis of the second bottle confirms the presence of the *Prohibited Substance* or its *Metabolites* or *Markers* found in the first bottle.

2.1.3 Excepting those substances for which a quantitative threshold is specifically identified in the *Prohibited List*, the presence of any quantity of a *Prohibited Substance* or its *Metabolites* or *Markers* in an *Athlete's Sample* shall constitute an anti-doping rule violation.

2.1.4 As an exception to the general rule of Article 2.1, the *Prohibited List* or *International Standards* may establish special criteria for the evaluation of *Prohibited Substances* that can also be produced endogenously.

2.2 *Use* or *Attempted Use* by an *Athlete* of a *Prohibited Substance* or a *Prohibited Method*

2.2.1 It is each *Athlete*'s personal duty to ensure that no *Prohibited Substance* enters his or her body and that no *Prohibited Method* is *Used*. Accordingly, it is not necessary that intent, *Fault*, negligence or knowing *Use* on the *Athlete*'s part be demonstrated in order to establish an anti-doping rule violation for *Use* of a *Prohibited Substance* or a *Prohibited Method*.

EDITION 2017 | Second Print 01/2018
Copyright: ISSF

2.2.2 The success or failure of the *Use* or *Attempted Use* of a *Prohibited Substance* or *Prohibited Method* is not material. It is sufficient that the *Prohibited Substance* or *Prohibited Method* was *Used* or *Attempted* to be *Used* for an anti-doping rule violation to be committed.

2.3 Evading, Refusing or Failing to Submit to *Sample* Collection

Evading *Sample* collection, or without compelling justification refusing or failing to submit to *Sample* collection after notification as authorized in these Anti-Doping Rules or other applicable anti-doping rules.

2.4 Whereabouts Failures

Any combination of three missed tests and/or filing failures, as defined in the International Standard for Testing and Investigations, within a twelve-month period by an *Athlete* in *a Registered Testing Pool.*

2.5 *Tampering* or *Attempted Tampering* with any part of *Doping Control*

Conduct which subverts the *Doping Control* process but which would not otherwise be included in the definition of *Prohibited Methods. Tampering* shall include, without limitation, intentionally interfering or attempting to interfere with a *Doping Control* official, providing fraudulent information to an *Anti-Doping Organization*, or intimidating or attempting to intimidate a potential witness.

2.6 *Possession* of a *Prohibited Substance* or a *Prohibited Method*

2.6.1 *Possession* by an *Athlete In-Competition* of any *Prohibited Substance* or any *Prohibited Method*, or *Possession* by an *Athlete Out-of-Competition* of any *Prohibited Substance* or any *Prohibited Method* which is prohibited *Out-of-Competition* unless the *Athlete* establishes that the *Possession* is consistent with a Therapeutic Use Exemption ("*TUE*") granted in accordance with Article 4.4 or other acceptable justification.

2.6.2 *Possession* by an *Athlete Support Person In-Competition* of any *Prohibited Substance* or any *Prohibited Method*, or *Possession* by an *Athlete Support Person Out-of-Competition* of any *Prohibited Substance* or any *Prohibited Method* which is prohibited *Out-of-Competition* in connection with an *Athlete*, *Competition* or training, unless the *Athlete Support Person* establishes that the *Possession* is consistent with a *TUE* granted to an *Athlete* in accordance with Article 4.4 or other acceptable justification.

Copyright: ISSF

2.7 ***Trafficking* or *Attempted Trafficking* in any *Prohibited Substance* or *Prohibited Method***

2.8 ***Administration* or *Attempted Administration* to any *Athlete In-Competition* of any *Prohibited Substance or Prohibited Method,* or *Administration* or *Attempted Administration* to any *Athlete Out-of-Competition* of any *Prohibited Substance* or any *Prohibited Method* that is prohibited *Out-of-Competition***

2.9 **Complicity**

Assisting, encouraging, aiding, abetting, conspiring, covering up or any other type of intentional complicity involving an anti-doping rule violation, *Attempted* anti-doping rule violation or violation of Article 10.12.1 by another *Person*.

2.10 **Prohibited Association**

Association by an *Athlete* or other *Person* subject to the authority of an *Anti-Doping Organization* in a professional or sport-related capacity with any *Athlete Support Person* who:

2.10.1 If subject to the authority of an *Anti-Doping Organization*, is serving a period of *Ineligibility*; or

2.10.2 If not subject to the authority of an *Anti-Doping Organization* and where *Ineligibility* has not been addressed in a results management process pursuant to the *Code*, has been convicted or found in a criminal, disciplinary or professional proceeding to have engaged in conduct which would have constituted a violation of anti-doping rules if *Code*-compliant rules had been applicable to such *Person.* The disqualifying status of such *Person* shall be in force for the longer of six years from the criminal, professional or disciplinary decision or the duration of the criminal, disciplinary or professional sanction imposed; or

EDITION 2017 | Second Print 01/2018
Copyright: ISSF

2.10.3 Is serving as a front or intermediary for an individual described in Article 2.10.1 or 2.10.2.

In order for this provision to apply, it is necessary that the *Athlete* or other *Person* has previously been advised in writing by an *Anti-Doping Organization* with jurisdiction over the *Athlete* or other *Person*, or by *WADA*, of the *Athlete Support Person*'s disqualifying status and the potential *Consequence* of prohibited association and that the *Athlete* or other *Person* can reasonably avoid the association. The *Anti-Doping Organization* shall also use reasonable efforts to advise the *Athlete Support Person* who is the subject of the notice to the *Athlete* or other *Person* that the *Athlete Support Person* may, within 15 days, come forward to the *Anti-Doping Organization* to explain that the criteria described in Articles 2.10.1 and 2.10.2 do not apply to him or her. (Notwithstanding Article 18, this Article applies even when the *Athlete Support Person's* disqualifying conduct occurred prior to the effective date provided in Article 21.7.)

The burden shall be on the *Athlete* or other *Person* to establish that any association with *Athlete Support Personnel* described in Article 2.10.1 or 2.10.2 is not in a professional or sport-related capacity.

Anti-Doping Organizations that are aware of *Athlete Support Personnel* who meet the criteria described in Article 2.10.1, 2.10.2, or 2.10.3 shall submit that information to *WADA*.

3 PROOF OF DOPING

3.1 Burdens and Standards of Proof

The ISSF shall have the burden of establishing that an anti-doping rule violation has occurred. The standard of proof shall be whether the ISSF has established an anti-doping rule violation to the comfortable satisfaction of the hearing panel bearing in mind the seriousness of the allegation which is made. This standard of proof in all cases is greater than a mere balance of probability but less than proof beyond a reasonable doubt. Where these Anti-Doping Rules place the burden of proof upon the *Athlete* or other *Person* alleged to have committed an anti-doping rule violation to rebut a presumption or establish specified facts or circumstances, the standard of proof shall be by a balance of probability.

3.2 Methods of Establishing Facts and Presumptions

Facts related to anti-doping rule violations may be established by any reliable means, including admissions. The following rules of proof shall be applicable in doping cases:

Copyright: ISSF

3.2.1 Analytical methods or decision limits approved by *WADA* after consultation within the relevant scientific community and which have been the subject of peer review are presumed to be scientifically valid. Any *Athlete* or other *Person* seeking to rebut this presumption of scientific validity shall, as a condition precedent to any such challenge, first notify *WADA* of the challenge and the basis of the challenge. *CAS* on its own initiative may also inform *WADA* of any such challenge. At *WADA*'s request, the *CAS* panel shall appoint an appropriate scientific expert to assist the panel in its evaluation of the challenge. Within 10 days of *WADA*'s receipt of such notice, and *WADA*'s receipt of the *CAS* file, *WADA* shall also have the right to intervene as a party, appear amicus curiae, or otherwise provide evidence in such proceeding.

3.2.2 *WADA*-accredited laboratories, and other laboratories approved by *WADA*, are presumed to have conducted *Sample* analysis and custodial procedures in accordance with the International Standard for Laboratories. The *Athlete* or other *Person* may rebut this presumption by establishing that a departure from the International Standard for Laboratories occurred which could reasonably have caused the *Adverse Analytical Finding*. If the *Athlete* or other *Person* rebuts the preceding presumption by showing that a departure from the International Standard for Laboratories occurred which could reasonably have caused the *Adverse Analytical Finding*, then the ISSF shall have the burden to establish that such departure did not cause the *Adverse Analytical Finding*.

3.2.3 Departures from any other *International Standard* or other anti-doping rule or policy set forth in the *Code* or these Anti-Doping Rules which did not cause an *Adverse Analytical Finding* or other anti-doping rule violation shall not invalidate such evidence or results. If the *Athlete* or other *Person* establishes a departure from another *International Standard* or other anti-doping rule or policy which could reasonably have caused an anti-doping rule violation based on an *Adverse Analytical Finding* or other anti-doping rule violation, then the ISSF shall have the burden to establish that such departure did not cause the *Adverse Analytical Finding* or the factual basis for the anti-doping rule violation.

3.2.4 The facts established by a decision of a court or professional disciplinary tribunal of competent jurisdiction which is not the subject of a pending appeal shall be irrebuttable evidence against the *Athlete* or other *Person* to whom the decision pertained of those facts unless the *Athlete* or other *Person* establishes that the decision violated principles of natural justice.

3.2.5 The hearing panel in a hearing on an anti-doping rule violation may draw an inference adverse to the *Athlete* or other *Person* who is asserted to have committed an anti-doping rule violation based on the *Athlete's* or other *Person*'s refusal, after a request made in a reasonable time in advance of the hearing, to appear at the hearing (either in person or telephonically as directed by the hearing panel) and to answer questions from the hearing panel or the ISSF.

EDITION 2017 | Second Print 01/2018
Copyright: ISSF

4 THE PROHIBITED LIST

4.1 Incorporation of the *Prohibited List*

These Anti-Doping Rules incorporate the *Prohibited List*, which is published and revised by *WADA* as described in Article 4.1 of the *Code*.

4.2 *Prohibited Substances* and *Prohibited Methods* Identified on the *Prohibited List*

4.2.1 *Prohibited Substances* and *Prohibited Methods*

Unless provided otherwise in the *Prohibited List* and/or a revision, the *Prohibited List* and revisions shall go into effect under these Anti-Doping Rules three months after publication by *WADA*, without requiring any further action by the ISSF or its *National Federations.* All *Athletes* and other *Persons* shall be bound by the *Prohibited List*, and any revisions thereto, from the date they go into effect, without further formality. It is the responsibility of all *Athletes* and other *Persons* to familiarize themselves with the most up-to-date version of the *Prohibited List* and all revisions thereto.

4.2.2 *Specified Substances*

For purposes of the application of Article 10, all *Prohibited Substances* shall be *Specified Substances* except substances in the classes of anabolic agents and hormones and those stimulants and hormone antagonists and modulators so identified on the *Prohibited List*. The use of beta blockers is prohibited both *In-Competition and Out-of Competition* in shooting sport. The category of *Specified Substances* shall not include *Prohibited Methods*.

4.3 *WADA*'s Determination of the *Prohibited List*

WADA's determination of the *Prohibited Substances* and *Prohibited Methods* that will be included on the *Prohibited List*, the classification of substances into categories on the *Prohibited List*, and the classification of a substance as prohibited at all times or *In-Competition* only, is final and shall not be subject to challenge by an *Athlete* or other *Person* based on an argument that the substance or method was not a masking agent or did not have the potential to enhance performance, represent a health risk or violate the spirit of sport.

4.3.1 Alcohol is not included on the *Prohibited List* as being prohibited in shooting sport. However, alcohol is dangerous to the health of *Athletes*, and more importantly can pose a serious safety risk at the shooting range when misused. Any *Athlete* showing signs of intoxication with alcohol or other drugs shall immediately be expelled from a shooting range. A breath analyzer and/or psychomotor tests may be used to facilitate decisions on this matter.

Copyright: ISSF

4.4 Therapeutic Use Exemptions ("*TUEs*")

4.4.1 The presence of a *Prohibited Substance* or its *Metabolites* or *Markers*, and/or the *Use* or *Attempted Use*, *Possession* or *Administration* or *Attempted Administration* of a *Prohibited Substance* or *Prohibited Method*, shall not be considered an anti-doping rule violation if it is consistent with the provisions of a *TUE* granted in accordance with the International Standard for Therapeutic Use Exemptions.

4.4.2 If an *International-Level Athlete* is using a *Prohibited Substance* or a *Prohibited Method* for therapeutic reasons:

4.4.2.1 Where the *Athlete* already has a *TUE* granted by his or her *National Anti-Doping Organization* for the substance or method in question, that *TUE* is not automatically valid for international-level *Competition.* However, the *Athlete* may apply to the ISSF to recognize that *TUE*, in accordance with Article 7 of the International Standard for Therapeutic Use Exemptions. If that *TUE* meets the criteria set out in the International Standard for Therapeutic Use Exemptions, then the ISSF shall recognize it for purposes of international-level *Competition* as well. If the ISSF considers that the *TUE* does not meet those criteria and so refuses to recognize it, the ISSF shall notify the *Athlete* and his or her *National Anti-Doping Organization* promptly, with reasons. The *Athlete* and the *National Anti-Doping Organization* shall have 21 days from such notification to refer the matter to *WADA* for review in accordance with Article 4.4.6. If the matter is referred to *WADA* for review, the *TUE* granted by the *National Anti-Doping Organization* remains valid for national-level *Competition* and *Out-of-Competition Testing* - but is not valid for international-level *Competition* - pending *WADA*'s decision. If the matter is not referred to *WADA* for review, the *TUE* becomes invalid for any purpose when the 21-day review deadline expires.

4.4.2.2 If the *Athlete* does not already have a *TUE* granted by his/her *National Anti-Doping Organization* for the substance or method in question, the *Athlete* must apply directly to the ISSF for a *TUE* in accordance with the process set out in the International Standard for Therapeutic Use Exemptions. If the ISSF denies the *Athlete*'s application, it must notify the *Athlete* promptly, with reasons. If the ISSF grants the *Athlete*'s application, it shall notify not only the *Athlete* but also his or her *National Federation* and/or *Anti-Doping Organization*. If the *National Federation* and/or *Anti-Doping Organization* considers that the *TUE* granted by the ISSF does not meet the criteria set out in the International Standard for Therapeutic Use Exemptions, it has 21 days from such notification to refer the matter to *WADA* for review in accordance with Article 4.4.6. If the *National Federation or Anti-Doping Organization* refers the matter to *WADA* for review, the *TUE* granted by the ISSF remains valid for international-level *Competition* and *Out-of-Competition Testing* (but is not valid for national-level *Competition*) pending *WADA*'s decision. If the *National Federation or Anti-Doping Organization* does not refer the matter to *WADA* for review, the *TUE* granted by the ISSF becomes valid for national-level *Competition* as well when the 21-day review deadline expires.

EDITION 2017 | Second Print 01/2018
Copyright: ISSF

4.4.3 If the ISSF chooses to test an *Athlete* who is not an *International-Level Athlete*, the ISSF shall recognize a *TUE* granted to that *Athlete* by his or her *National Anti-Doping Organization*. If the ISSF chooses to test an *Athlete* who is neither an *International-Level* nor a *National-Level Athlete*, the ISSF shall permit that *Athlete* to apply for a retroactive *TUE* for any *Prohibited Substance* or *Prohibited Method* that he/she is using for therapeutic reasons.

4.4.4 An application to the ISSF for grant or recognition of a *TUE* must be made as soon as the need arises and in any event (save in emergency or exceptional situations or where Article 4.3 of the International Standard for Therapeutic Use Exemptions applies) at least 30 days before the *Athlete's* next *International Event* or *Competition*.

4.4.4.1 Save in emergency or exceptional situations or where Article 4.3 of the International Standard for Therapeutic Use Exemptions applies, where an *Athlete* fails to notify the ISSF of his/her national-level *TUE* prior to competing in an *International Event* or *Competition* within the 30 day deadline and-or until the ISSF has officially notified the *Athlete* that it has recognized the *TUE* within the 21 day deadline, his/her *TUE* shall not be valid for *International Events* or *Competitions* and any positive doping control organized or authorized by ISSF whether conducted *In-Competition* or *Out-of-Competition* while the *Athlete* is using the substance for which the non-recognized national *TUE* was granted shall be considered an anti-doping rule violation and treated with all resulting consequences.

4.4.4.2 The ISSF shall appoint a panel to consider application for the grant or recognition of *TUEs* (the "TUE Committee"). The TUE Committee shall promptly evaluate and decide upon the application in accordance with the relevant provisions of the International Standard for Therapeutic Use Exemptions. Its decision shall be the final decision of the ISSF and shall be reported to *WADA* and other relevant *Anti-Doping Organizations*, including the *Athlete*'s *National Anti-Doping Organization*, through *ADAMS*, in accordance with the International Standard for Therapeutic Use Exemptions.

4.4.5 Expiration, Cancellation, Withdrawal or Reversal of a TUE

4.4.5.1 A *TUE* granted pursuant to these Anti-Doping Rules: (a) shall expire automatically at the end of any term for which it was granted, without the need for any further notice or other formality; (b) may be cancelled if the *Athlete* does not promptly comply with any requirements or conditions imposed by the TUE Committee upon grant of the *TUE*; (c) may be withdrawn by the TUE Committee if it is subsequently determined that the criteria for grant of a *TUE* are not in fact met; or (d) may be reversed on review by *WADA* or on appeal.

Copyright: ISSF

4.4.5.2 In such event, the *Athlete* shall not be subject to any *Consequences* based on his/her *Use* or *Possession* or *Administration* of the *Prohibited Substance* or *Prohibited Method* in question in accordance with the *TUE* prior to the effective date of expiry, cancellation, withdrawal or reversal of the *TUE*. The review pursuant to Article 7.2 of any subsequent *Adverse Analytical Finding* shall include consideration of whether such finding is consistent with *Use* of the *Prohibited Substance* or *Prohibited Method* prior to that date, in which event no anti-doping rule violation shall be asserted.

4.4.6 Reviews and Appeals of TUE Decisions

4.4.6.1 *WADA* shall review any decision by the ISSF not to recognize a *TUE* granted by the *National Anti-Doping Organization* that is referred *to WADA* by the *Athlete* or the *Athlete's National Anti-Doping Organization.* In addition, *WADA* shall review any decision by the ISSF to grant a *TUE* that is referred *to WADA* by the *Athlete's National Anti-Doping Organization*. *WADA* may review any other *TUE* decisions at any time, whether upon request by those affected or on its own initiative. If the *TUE* decision being reviewed meets the criteria set out in the International Standard for Therapeutic Use Exemptions, *WADA* will not interfere with it. If the *TUE* decision does not meet those criteria, *WADA* will reverse it.

4.4.6.2 Any *TUE* decision by the ISSF (or by a *National Anti-Doping Organization* where it has agreed to consider the application on behalf of the ISSF) that is not reviewed by *WADA*, or that is reviewed by *WADA* but is not reversed upon review, may be appealed by the *Athlete* and/or the *Athlete's National Anti-Doping* Organization exclusively to CAS, in accordance with Article 13.

4.4.6.3 A decision by WADA to reverse a TUE decision may be appealed by the Athlete, the National Anti-Doping Organization and/or the ISSF exclusively to CAS, in accordance with Article 13.

4.4.6.4 A failure to take action within a reasonable time on a properly submitted application for grant or recognition of a *TUE* or for review of a *TUE* decision shall be considered a denial of the application.

5 *TESTING* AND INVESTIGATIONS

5.1 Purpose of *Testing* and Investigations

Testing and investigations shall only be undertaken for anti-doping purposes. They shall be conducted in conformity with the provisions of the International Standard for Testing and Investigations and the specific protocols of the ISSF supplementing that International Standard.

EDITION 2017 | Second Print 01/2018
Copyright: ISSF

5.1.1 *Testing* shall be undertaken to obtain analytical evidence as to the *Athlete*'s compliance (or non-compliance) with the strict *Code* prohibition on the presence/ *Use* of a *Prohibited Substance* or *Prohibited Method*. Test distribution planning, *Testing*, post-*Testing* activity and all related activities conducted by the ISSF shall be in conformity with the International Standard for Testing and Investigations. The ISSF shall determine the number of finishing placement tests, random tests and target tests to be performed, in accordance with the criteria established by the International Standard for Testing and Investigations. All provisions of the International Standard for Testing and Investigations shall apply automatically in respect of all such *Testing.*

5.1.2 Investigations shall be undertaken:

5.1.2.1 in relation to *Atypical Findings*, Atypical Passport Findings and *Adverse Passport Findings*, in accordance with Articles 7.4 and 7.5 respectively, gathering intelligence or evidence (including, in particular, analytical evidence) in order to determine whether an anti-doping rule violation has occurred under Article 2.1 and/or Article 2.2; and

5.1.2.2 in relation to other indications of potential anti-doping rule violations, in accordance with Articles 7.6 and 7.7, gathering intelligence or evidence (including, in particular, non-analytical evidence) in order to determine whether an anti-doping rule violation has occurred under any of Articles 2.2 to 2.10.

5.1.3 With the assistance of its intelligence officer the ISSF may obtain, assess and process anti-doping intelligence from all available sources, to inform the development of an effective, intelligent and proportionate test distribution plan, to plan *Target Testing*, and/or to form the basis of an investigation into a possible anti-doping rule violation(s).

5.1.4 The handling and retention of any data or information or intelligence collected in the course of the ISSF testing program and/or in accordance with the ISSF test distribution plan shall respect and comply with the International Standard for the Protection of Privacy and Personal Information.

5.2 Authority to conduct *Testing*

5.2.1 Subject to the jurisdictional limitations for *Event Testing* set out in Article 5.3 of the *Code*, the ISSF shall have *In-Competition* and *Out-of-Competition Testing* authority over all of the *Athletes* specified in the Introduction to these Anti-Doping Rules (under the heading "Scope").

5.2.2 The ISSF may require any *Athlete* over whom it has *Testing* authority (including any *Athlete* serving a period of *Ineligibility*) to provide a *Sample* at any time and at any place.

5.2.3 *WADA* shall have *In-Competition* and *Out-of-Competition Testing* authority as set out in Article 20.7.8 of the *Code*.

Copyright: ISSF

5.2.4 If the ISSF delegates or contracts any part of *Testing* to a *National Anti-Doping Organization* (directly or through a *National Federation*), that *National Anti-Doping Organization* may collect additional *Samples* or direct the laboratory to perform additional types of analysis at the *National Anti-Doping Organization*'s expense. If additional *Samples* are collected or additional types of analysis are performed, the ISSF shall be notified.

5.3 *Event Testing*

5.3.1 Except as provided in Article 5.3 of the *Code*, only a single organization should be responsible for initiating and directing *Testing* at *Event Venues* during an *Event Period*. At *International Events*, the collection of *Samples* shall be initiated and directed by the ISSF (or any other international organization which is the ruling body for the *Event*). At the request of the ISSF (or any other international organization which is the ruling body for an *Event*), any *Testing* during the *Event Period* outside of the *Event Venues* shall be coordinated with the ISSF (or the relevant ruling body of the *Event*).

5.3.2 If an *Anti-Doping Organization* which would otherwise have *Testing* authority but is not responsible for initiating and directing *Testing* at an *Event* desires to conduct *Testing* of *Athletes* at the *Event Venues* during the *Event Period*, the *Anti-Doping Organization* shall first confer with the ISSF (or any other international organization which is the ruling body of the *Event*) to obtain permission to conduct and coordinate such *Testing*. If the *Anti-Doping Organization* is not satisfied with the response from the ISSF (or any other international organization which is the ruling body of the *Event*), the *Anti-Doping Organization* may ask *WADA* for permission to conduct *Testing* and to determine how to coordinate such *Testing*, in accordance with the procedures set out in the International Standard for Testing and Investigations. *WADA* shall not grant approval for such *Testing* before consulting with and informing the ISSF (or any other international organization which is the ruling body for the *Event*). *WADA*'s decision shall be final and not subject to appeal. Unless otherwise provided in the authorization to conduct *Testing*, such tests shall be considered *Out-of-Competition* tests. Results management for any such test shall be the responsibility of the *Anti-Doping Organization* initiating the test unless provided otherwise in the rules of the ruling body of the *Event*.

5.4 Test Distribution Planning

Consistent with the International Standard for Testing and Investigations, and in coordination with other *Anti-Doping Organization*s conducting *Testing* on the same *Athlete*s, the ISSF shall develop and implement an effective, intelligent and proportionate test distribution plan in compliance with the requirements of the International Standard for Testing and Investigations. The ISSF shall provide *WADA* upon request with a copy of its current test distribution plan.

EDITION 2017 | Second Print 01/2018
Copyright: ISSF

5.5 Coordination of *Testing*

Where reasonably feasible, *Testing* shall be coordinated through *ADAMS* or another system approved by *WADA* in order to maximize the effectiveness of the combined *Testing* effort and to avoid unnecessary repetitive *Testing*.

5.6 *Athlete* Whereabouts Information

5.6.1 The ISSF shall identify a *Registered Testing Pool* of those *Athletes* who are required to comply with the whereabouts requirements of Annex I of the International Standard for Testing and Investigations, and shall make available through *ADAMS,* a list which identifies those *Athlete*s included in its *Registered Testing Pool* either by name or by clearly defined, specific criteria. The ISSF shall coordinate with *National Anti-Doping Organizations* the identification of such *Athlete*s and the collection of their whereabouts information.

5.6.2 The ISSF shall review and update as necessary its criteria for including *Athletes* in its *Registered Testing Pool* and shall revise the membership of its *Registered Testing Pool* from time to time as appropriate in accordance with these criteria. *Athletes* shall be notified before they are included in a *Registered Testing Pool* and when they are removed from that pool. Each *Athlete* in the *Registered Testing Pool* shall do the following in accordance with Annex I to the International Standard for Testing and Investigations: (a) advise the ISSF of his/her whereabouts on a quarterly basis; (b) update that information as necessary so that it remains accurate and complete at all times; and (c) make him/herself available for *Testing* at such whereabouts.

5.6.3 For purposes of Article 2.4, an *Athlete's* failure to comply with the requirements of the International Standard for Testing and Investigations shall be deemed a filing failure or a missed test (as defined in the International Standard for Testing and Investigations) where the conditions set forth in the International Standard for Testing and Investigations for declaring a filing failure or missed test are met.

5.6.4 An *Athlete* in the *Registered Testing Pool* shall continue to be subject to the obligation to comply with the whereabouts requirements of Annex I to the International Standard for Testing and Investigations unless and until (a) the *Athlete* gives written notice to the ISSF that he/she has retired or (b) the ISSF has informed him or her that he/she no longer satisfies the criteria for inclusion in the *Registered Testing Pool*.

5.6.5 Whereabouts information relating to an *Athlete* shall be shared (through *ADAMS*) with *WADA* and other *Anti-Doping Organizations* having authority to test that *Athlete*, shall be maintained in strict confidence at all times, shall be used exclusively for the purposes set out in Article 5.6 of the *Code*, and shall be destroyed in accordance with the International Standard for the Protection of Privacy and Personal Information once it is no longer relevant for these purposes.

Copyright: ISSF

5.7 Retired *Athletes* Returning to *Competition*

5.7.1 An *Athlete* in the ISSF's *Registered Testing Pool* who has given notice of retirement to the ISSF may not resume competing in *International Events* or *National Events* until he/she has given the ISSF written notice of his/her intent to resume competing and has made him/herself available for *Testing* for a period of six months before returning to *Competition*, including (if requested) complying with the whereabouts requirements of Annex I to the International Standard for Testing and Investigations. *WADA*, in consultation with the ISSF and the *Athlete's National Anti-Doping Organization*, may grant an exemption to the six-month written notice rule where the strict application of that rule would be manifestly unfair to an *Athlete*. This decision may be appealed under Article 13. Any competitive results obtained in violation of this Article 5.7.1 shall be *Disqualified*.

5.7.2 If an *Athlete* retires from sport while subject to a period of *Ineligibility*, the *Athlete* shall not resume competing in *International Events* or *National Events* until the *Athlete* has given six months prior written notice (or notice equivalent to the period of *Ineligibility* remaining as of the date the *Athlete* retired, if that period was longer than six months) to the ISSF and to his/her *National Anti-Doping Organization* of his/her intent to resume competing and has made him/herself available for *Testing* for that notice period, including (if requested) complying with the whereabouts requirements of Annex I to the International Standard for Testing and Investigations.

5.8 *Independent Observer Program*

The ISSF and the organizing committees for ISSF *Events*, as well as the *National Federations* and the organizing committees for *National Events,* shall authorize and facilitate the *Independent Observer Program* at such *Events*.

6 ANALYSIS OF *SAMPLES*

Samples shall be analyzed in accordance with the following principles:

6.1 Use of Accredited and Approved Laboratories

For purposes of Article 2.1, *Samples* shall be analyzed only in laboratories accredited or otherwise approved by *WADA*. The choice of the *WADA*-accredited or *WADA*-approved laboratory used for the *Sample* analysis shall be determined exclusively by the ISSF.

EDITION 2017 | Second Print 01/2018
Copyright: ISSF

6.2 Purpose of Analysis of *Samples*

6.2.1 *Samples* shall be analyzed to detect *Prohibited Substances* and *Prohibited Methods* and other substances as may be directed by *WADA* pursuant to the Monitoring Program described in Article 4.5 of the *Code*; or to assist the ISSF in profiling relevant parameters in an *Athlete*'s urine, blood or other matrix, including DNA or genomic profiling; or for any other legitimate anti-doping purpose. *Samples* may be collected and stored for future analysis.

6.2.2 The ISSF shall ask laboratories to analyze *Samples* in conformity with Article 6.4 of the *Code* and Article 4.7 of the International Standard for Testing and Investigations.

6.3 Research on *Samples*

No *Sample* may be used for research without the *Athlete's* written consent. *Samples* used for purposes other than Article 6.2 shall have any means of identification removed such that they cannot be traced back to a particular *Athlete*.

6.4 Standards for *Sample* Analysis and Reporting

Laboratories shall analyze *Samples* and report results in conformity with the International Standard for Laboratories. To ensure effective *Testing*, the Technical Document referenced at Article 5.4.1 of the *Code* will establish risk assessment-based *Sample* analysis menus appropriate for particular sports and sport disciplines, and laboratories shall analyze *Samples* in conformity with those menus, except as follows:

6.4.1 The ISSF may request that laboratories analyze its *Samples* using more extensive menus than those described in the Technical Document.

6.4.2 The ISSF may request that laboratories analyze its *Samples* using less extensive menus than those described in the Technical Document because it has satisfied *WADA* that, because of the particular circumstances of its sport, as set out in its test distribution plan, less extensive analysis would be appropriate.

6.4.3 As provided in the International Standard for Laboratories, laboratories at their own initiative and expense may analyze *Samples* for *Prohibited Substances* or *Prohibited Methods* not included on the *Sample* analysis menu described in the Technical Document or specified by the *Testing* authority. Results from any such analysis shall be reported and have the same validity and consequence as any other analytical result.

Copyright: ISSF

6.5 Further Analysis of *Samples*

Any *Sample* may be stored and subsequently subjected to further analysis for the purposes set out in Article 6.2: (a) by *WADA* at any time; and/or (b) by the ISSF at any time before both the A and B *Sample* analytical results (or A *Sample* result where B *Sample* analysis has been waived or will not be performed) have been communicated by the ISSF to the *Athlete* as the asserted basis for an Article 2.1 anti-doping rule violation. Such further analysis of *Samples* shall conform with the requirements of the International Standard for Laboratories and the International Standard for Testing and Investigations.

7 RESULTS MANAGEMENT

7.1 Responsibility for Conducting Results Management

7.1.1 The circumstances in which the ISSF shall take responsibility for conducting results management in respect of anti-doping rule violations involving *Athletes* and other *Persons* under its jurisdiction shall be determined by reference to and in accordance with Article 7 of the *Code*.

7.2 Review of *Adverse Analytical Findings* from Tests Initiated by the ISSF

Results management in respect of the results of tests initiated by the ISSF (including tests performed by *WADA* or any other doping control service provider pursuant to agreement with the ISSF) shall proceed as follows:

7.2.1 The results from all analyses must be sent to the ISSF in encoded form, in a report signed by an authorized representative of the laboratory. All communication must be conducted confidentially and in conformity with *ADAMS*.

7.2.2 Upon receipt of an *Adverse Analytical Finding*, the ISSF shall conduct a review to determine whether: (a) an applicable *TUE* has been granted or will be granted as provided in the International Standard for Therapeutic Use Exemptions, or (b) there is any apparent departure from the International Standard for Testing and Investigations or International Standard for Laboratories that caused the *Adverse Analytical Finding*.

7.2.3 If the review of an *Adverse Analytical Finding* under Article 7.2.2 reveals an applicable *TUE* or departure from the International Standard for Testing and Investigations or the International Standard for Laboratories that caused the *Adverse Analytical Finding*, the entire test shall be considered negative and the *Athlete*, the *Athlete*'s *National Federation* and *National Anti Doping Organization* and *WADA* shall be so informed.

EDITION 2017 | Second Print 01/2018
Copyright: ISSF

7.3 Notification After Review Regarding *Adverse Analytical Findings*

7.3.1 If the review of an *Adverse Analytical Finding* under Article 7.2.2 does not reveal an applicable *TUE* or entitlement to a *TUE* as provided in the International Standard for Therapeutic Use Exemptions, or departure from the International Standard for Testing and Investigations or the International Standard for Laboratories that caused the *Adverse Analytical Finding*, the ISSF shall promptly notify the *Athlete*, and simultaneously the *Athlete's National Federation* and *National Anti Doping Organization* and *WADA*, in the manner set out in Article 15.1, of: (a) the *Adverse Analytical Finding*; (b) the anti-doping rule violated; (c) the *Athlete*'s right to promptly request the analysis of the B *Sample* or, failing such request, that the B *Sample* analysis may be deemed waived; (d) the scheduled date, time and place for the B *Sample* analysis if the *Athlete* or the ISSF chooses to request an analysis of the B *Sample*; (e) the opportunity for the *Athlete* and/or the *Athlete*'s representative to attend the B *Sample* opening and analysis in accordance with the International Standard for Laboratories if such analysis is requested; and (f) the *Athlete*'s right to request copies of the A and B *Sample* laboratory documentation package which includes information as required by the International Standard for Laboratories. If the ISSF decides not to bring forward the *Adverse Analytical Finding* as an anti-doping rule violation, it shall so notify the *Athlete*, the *Athlete*'s *National Federation* and *National Anti Doping Organization* and *WADA*.

7.3.2 Where requested by the *Athlete* or the ISSF, arrangements shall be made to analyze the B *Sample* in accordance with the International Standard for Laboratories. An *Athlete* may accept the A *Sample* analytical results by waiving the requirement for B *Sample* analysis. The ISSF may nonetheless elect to proceed with the B *Sample* analysis.

7.3.3 The *Athlete* and/or his representative shall be allowed to be present at the analysis of the B *Sample*. Also, a representative of the ISSF as well as a representative of the *Athlete*'s *National Federation* shall be allowed to be present.

7.3.4 If the B *Sample* analysis does not confirm the A *Sample* analysis, then (unless the ISSF takes the case forward as an anti-doping rule violation under Article 2.2) the entire test shall be considered negative and the *Athlete*, the *Athlete*'s *National Federation* and *National Anti Doping Organization* and *WADA* shall be so informed.

7.3.5 If the B *Sample* analysis confirms the A *Sample* analysis, the findings shall be reported to the *Athlete*, the *Athlete*'s *National Federation* and *National Anti Doping Organization* and to *WADA*.

Copyright: ISSF

7.4 Review of *Atypical Findings*

7.4.1 As provided in the International Standard for Laboratories, in some circumstances laboratories are directed to report the presence of *Prohibited Substances*, which may also be produced endogenously, as *Atypical Findings*, i.e., as findings that are subject to further investigation.

7.4.2 Upon receipt of an *Atypical Finding*, the ISSF shall conduct a review to determine whether: (a) an applicable *TUE* has been granted or will be granted as provided in the International Standard for Therapeutic Use Exemptions, or (b) there is any apparent departure from the International Standard for Testing and Investigations or International Standard for Laboratories that caused the *Atypical Finding.*

7.4.3 If the review of an *Atypical Finding* under Article 7.4.2 reveals an applicable *TUE* or a departure from the International Standard for Testing and Investigations or the International Standard for Laboratories that caused the *Atypical Finding*, the entire test shall be considered negative and the *Athlete*, the *Athlete*'s *National Federation* and *National Anti Doping Organization* and *WADA* shall be so informed.

7.4.4 If that review does not reveal an applicable *TUE* or a departure from the International Standard for Testing and Investigations or the International Standard for Laboratories that caused the *Atypical Finding*, the ISSF shall conduct the required investigation or cause it to be conducted. After the investigation is completed, either the *Atypical Finding* will be brought forward as an *Adverse Analytical Finding*, in accordance with Article 7.3.1, or else the *Athlete,* the *Athlete*'s *National Federation* and *National Anti Doping Organization* and *WADA* shall be notified that the *Atypical Finding* will not be brought forward as an *Adverse Analytical Finding*.

7.4.5 The ISSF will not provide notice of an *Atypical Finding* until it has completed its investigation and has decided whether it will bring the *Atypical Finding* forward as an *Adverse Analytical Finding* unless one of the following circumstances exists:

7.4.5.1 If the ISSF determines the B *Sample* should be analyzed prior to the conclusion of its investigation, it may conduct the B *Sample* analysis after notifying the *Athlete*, with such notice to include a description of the *Atypical Finding* and the information described in Article 7.3.1(d)-(f).

7.4.5.2 If the ISSF is asked (a) by a *Major Event Organization* shortly before one of its *International Events*, or (b) by a sport organization responsible for meeting an imminent deadline for selecting team members for an *International Event*, to disclose whether any *Athlete* identified on a list provided by the *Major Event Organization* or sport organization has a pending *Atypical Finding*, the ISSF shall so advise the *Major Event Organization* or sports organization after first providing notice of the *Atypical Finding* to the *Athlete.*

EDITION 2017 | Second Print 01/2018
Copyright: ISSF

7.5 Review of *Atypical Passport Findings* and *Adverse Passport Findings*

Review of *Atypical Passport Findings* and *Adverse Passport Findings* shall take place as provided in the International Standard for Testing and Investigations and International Standard for Laboratories. At such time as the ISSF is satisfied that an anti-doping rule violation has occurred, it shall promptly give the *Athlete* (and simultaneously the *Athlete's National Federation*, *National Anti Doping Organization* and *WADA*) notice of the anti-doping rule violation asserted and the basis of that assertion.

7.6 Review of Whereabouts Failures

The ISSF shall review potential filing failures and missed tests, as defined in the International Standard for Testing and Investigations, in respect of *Athletes* who file their whereabouts information with the ISSF in accordance with Annex I to the International Standard for Testing and Investigations. At such time as the ISSF is satisfied that an Article 2.4 anti-doping rule violation has occurred, it shall promptly give the *Athlete* (and simultaneously the *Athlete's National Federation*, *National Anti Doping Organization* and *WADA*) notice that it is asserting a violation of Article 2.4 and the basis of that assertion.

7.7 Review of Other Anti-Doping Rule Violations Not Covered by Articles 7.2–7.6

The ISSF shall conduct any follow-up investigation required into a possible anti-doping rule violation not covered by Articles 7.2- 7.6. At such time as the ISSF is satisfied that an anti-doping rule violation has occurred, it shall promptly give the *Athlete* or other *Person* (and simultaneously the *Athlete's* or other *Person's National Federation*, *National Anti Doping Organization* and *WADA*) notice of the anti-doping rule violation asserted and the basis of that assertion.

7.8 Identification of Prior Anti-Doping Rule Violations

Before giving an *Athlete* or other *Person* notice of an asserted anti-doping rule violation as provided above, the ISSF shall refer to *ADAMS* and contact *WADA* and other relevant *Anti-Doping Organizations* to determine whether any prior anti-doping rule violation exists.

7.9 *Provisional Suspensions*

7.9.1 Mandatory ***Provisional Suspension***: If analysis of an A *Sample* has resulted in an *Adverse Analytical Finding* for a *Prohibited Substance* that is not a *Specified Substance*, or for a *Prohibited Method*, and a review in accordance with Article 7.2.2 does not reveal an applicable *TUE* or departure from the International Standard for Testing and Investigations or the International Standard for Laboratories that caused the *Adverse Analytical Finding*, a *Provisional Suspension* shall be imposed upon or promptly after the notification described in Articles 7.2, 7.3 or 7.5.

Copyright: ISSF

7.9.2 Optional ***Provisional Suspension***: In case of an *Adverse Analytical Finding* for a *Specified Substance*, or in the case of any other anti-doping rule violations not covered by Article 7.9.1, the ISSF may impose a *Provisional Suspension* on the *Athlete* or other *Person* against whom the anti-doping rule violation is asserted at any time after the review and notification described in Articles 7.2–7.7 and prior to the final hearing as described in Article 8.

7.9.3 Where a *Provisional Suspension* is imposed pursuant to Article 7.9.1 or Article 7.9.2, the *Athlete* or other *Person* shall be given either: (a) an opportunity for a *Provisional Hearing* either before or on a timely basis after imposition of the *Provisional Suspension*; or (b) an opportunity for an expedited final hearing in accordance with Article 8 on a timely basis after imposition of the *Provisional Suspension.* Furthermore, the *Athlete* or other *Person* has a right to appeal from the *Provisional Suspension* in accordance with Article 13.2 (save as set out in Article 7.9.3.1).

7.9.3.1 The *Provisional Suspension* may be lifted if the *Athlete* demonstrates to the hearing panel that the violation is likely to have involved a *Contaminated Product*. A hearing panel's decision not to lift a mandatory *Provisional Suspension* on account of the *Athlete's* assertion regarding a *Contaminated Product* shall not be appealable.

7.9.3.2 The Provisional Suspension shall be imposed (or shall not be lifted) unless the *Athlete* or other *Person* establishes that: (a) the assertion of an anti-doping rule violation has no reasonable prospect of being upheld, e.g., because of a patent flaw in the case against the *Athlete* or other *Person*; or (b) the *Athlete* or other *Person* has a strong arguable case that he/she bears *No Fault or Negligence* for the anti-doping rule violation(s) asserted, so that any period of *Ineligibility* that might otherwise be imposed for such a violation is likely to be completely eliminated by application of Article 10.4; or (c) some other facts exist that make it clearly unfair, in all of the circumstances, to impose a *Provisional Suspension* prior to a final hearing in accordance with Article 8. This ground is to be construed narrowly, and applied only in truly exceptional circumstances. For example, the fact that the *Provisional Suspension* would prevent the *Athlete* or other *Person* participating in a particular *Competition* or *Event* shall not qualify as exceptional circumstances for these purposes.

7.9.4 If a *Provisional Suspension* is imposed based on an A *Sample Adverse Analytical Finding* and subsequent analysis of the B *Sample* does not confirm the A *Sample* analysis, then the *Athlete* shall not be subject to any further *Provisional Suspension* on account of a violation of Article 2.1. In circumstances where the *Athlete* (or the *Athlete's* team) has been removed from a *Competition* based on a violation of Article 2.1 and the subsequent B *Sample* analysis does not confirm the A *Sample* finding, then if it is still possible for the *Athlete* or team to be reinserted, without otherwise affecting the *Competition*, the *Athlete* or team may continue to take part in the *Competition*. In addition, the *Athlete* or team may thereafter take part in other *Competitions* in the same *Event.*

EDITION 2017 | Second Print 01/2018
Copyright: ISSF

7.9.5 In all cases where an *Athlete* or other *Person* has been notified of an anti-doping rule violation but a *Provisional Suspension* has not been imposed on him or her, the *Athlete* or other *Person* shall be offered the opportunity to accept a *Provisional Suspension* voluntarily pending the resolution of the matter.

7.10 Resolution Without a Hearing

7.10.1 An *Athlete* or other *Person* against whom an anti-doping rule violation is asserted may admit that violation at any time, waive a hearing, and accept the *Consequences* that are mandated by these Anti-Doping Rules or (where some discretion as to *Consequences* exists under these Anti-Doping Rules) that have been offered by the ISSF.

7.10.2 Alternatively, if the *Athlete* or other *Person* against whom an anti-doping rule violation is asserted fails to dispute that assertion within the deadline specified in the notice sent by the ISSF asserting the violation, then he/she shall be deemed to have admitted the violation, to have waived a hearing, and to have accepted the *Consequences* that are mandated by these Anti-Doping Rules or (where some discretion as to *Consequences* exists under these Anti-Doping Rules) that have been offered by the ISSF.

7.10.3 In cases where Article 7.10.1 or Article 7.10.2 applies, a hearing before a hearing panel shall not be required. Instead the ISSF shall promptly issue a written decision confirming the commission of the anti-doping rule violation and the *Consequences* imposed as a result, and setting out the full reasons for any period of *Ineligibility* imposed, including (if applicable) a justification for why the maximum potential period of *Ineligibility* was not imposed. The ISSF shall send copies of that decision to other *Anti-Doping Organizations* with a right to appeal under Article 13.2.3, and shall *Publicly Disclose* that decision in accordance with Article 15.3.2.

7.11 Notification of Results Management Decisions

In all cases where the ISSF has asserted the commission of an anti-doping rule violation, withdrawn the assertion of an anti-doping rule violation, imposed a *Provisional Suspension*, or agreed with an *Athlete* or other *Person* on the imposition of *Consequences* without a hearing, the ISSF shall give notice thereof in accordance with Article 15.2.1 to other *Anti-Doping Organizations* with a right to appeal under Article 13.2.3.

Copyright: ISSF

7.12 Retirement from Sport

If an *Athlete* or other *Person* retires while the ISSF is conducting the results management process, the ISSF retains jurisdiction to complete its results management process. If an *Athlete* or other *Person* retires before any results management process has begun, and the ISSF would have had results management authority over the *Athlete* or other *Person* at the time the *Athlete* or other *Person* committed an anti-doping rule violation, the ISSF has authority to conduct results management in respect of that anti-doping rule violation.

8 RIGHT TO A FAIR HEARING

8.1 Principles for a Fair Hearing

8.1.1 When the ISSF sends a notice to an *Athlete* or other *Person* asserting an anti-doping rule violation, and the *Athlete* or other *Person* does not waive a hearing in accordance with Article 7.10.1 or Article 7.10.2, then the case shall be referred to the ISSF Anti-Doping Commission of Inquiry ("ISSF Commission of Enquiry") in preparation for the hearing and then submitted to the ISSF Anti-Doping Hearing Panel for adjudication and sanctioning.

8.1.2 Hearings shall be scheduled and completed within a reasonable time. Hearings held in connection with *Event*s that are subject to these Anti-Doping Rules may be conducted by an expedited process where permitted by the Anti-Doping Hearing Panel.

8.1.3 The ISSF Commission of Inquiry and ISSF Anti-Doping Hearing Panel shall both act in a fair and impartial manner towards all parties at all times.

8.1.4 *WADA* and the *National Federation* of the *Athlete* or other *Person* may take part in the hearing as observers. In any event, ISSF shall keep WADA fully apprised as to the status of pending cases and the result of all hearings

8.2 Decisions

8.2.1 At the end of the hearing, or on a timely basis thereafter, the ISSF Anti-Doping Hearing Panel shall issue a written decision that includes the full reasons for the decision and for any period of *Ineligibility* imposed, including (if applicable) a justification as to why the greatest potential *Consequences* were not imposed.

8.2.2 The decision may be appealed to the *CAS* as provided in Article 13. Copies of the decision shall be provided to the *Athlete* or other *Person* and to other *Anti-Doping Organizations* with a right to appeal under Article 13.2.3.

EDITION 2017 | Second Print 01/2018
Copyright: ISSF

8.2.3 If no appeal is brought against the decision, then (a) if the decision is that an anti-doping rule violation was committed, the decision shall be *Publicly Disclosed* as provided in Article 15.3.2; but (b) if the decision is that no anti-doping rule violation was committed, then the decision shall only be *Publicly Disclosed* with the consent of the *Athlete* or other *Person* who is the subject of the decision. The ISSF shall use reasonable efforts to obtain such consent, and if consent is obtained, shall *Publicly Disclose* the decision in its entirety or in such redacted form as the Athlete or other Person may approve.

The principles contained at Article 15.3.6 shall be applied in cases involving a *Minor*.

8.3 Single Hearing Before *CAS*

Cases asserting anti-doping rule violations may be heard directly at *CAS*, with no requirement for a prior hearing, with the consent of the *Athlete*, the ISSF, *WADA*, and any other *Anti-Doping Organization* that would have had a right to appeal a first instance hearing decision to *CAS*.

8.4 Hearings following *National Federations* Results Management

8.4.1 When it appears, following the results management process performed in accordance with Article 7 that these Anti-Doping Rules have been violated, the *national-level Athlete* or other *Person* involved shall be brought before a disciplinary panel of the *Athlete* or other *Person's National Federation* in accordance with the rules of the *National Federation* for a hearing to adjudicate whether a violation of these Anti-Doping Rules occurred and if so what *Consequences* should be imposed.

8.4.2 Hearings pursuant to this Article 8.4 shall be completed expeditiously and in all cases within three (3) months of the completion of the results management process described in Article 7.

8.4.3 If the adjudication process has not begun within three (3) months of the completion of the results management process, the ISSF is empowered to bring the case directly before the Anti-Doping Hearing Panel in accordance with Article 8 at the expense of the National Federation.

8.4.4 *National Federations* shall keep the ISSF and *WADA* fully apprised as to the status of pending cases and the results of all hearings and shall grant the ISSF and WADA the right to attend hearings as observers.

8.4.5 Decisions by *National Federations* or *National Anti-Doping Organizations*, whether as the result of a hearing or the *Athlete* or other *Person's* acceptance of *Consequences*, may be appealed as provided in Article 13.

8.4.6 Decisions rendered by a *National Federation* are subject to a review by the ISSF Commission of Inquiry and the ISSF Executive Committee in accordance with Article 14 of these Anti-Doping Rules.

Copyright: ISSF

9 AUTOMATIC *DISQUALIFICATION* OF INDIVIDUAL RESULTS

An anti-doping rule violation in *Individual Sports* in connection with an *In-Competition* test automatically leads to *Disqualification* of the result obtained in that *Competition* with all resulting *Consequences*, including forfeiture of any medals, points and prizes.

10 SANCTIONS ON INDIVIDUALS

10.1 *Disqualification* of Results in the *Event* during which an Anti-Doping Rule Violation Occurs

An anti-doping rule violation occurring during or in connection with an *Event* may, upon the decision of the ruling body of the *Event*, lead to *Disqualification* of all of the *Athlete's* individual results obtained in that *Event* with all *Consequences*, including forfeiture of all medals, points and prizes, except as provided in Article 10.1.1.

Factors to be included in considering whether to *Disqualify* other results in an *Event* might include, for example, the seriousness of the *Athlete*'s anti-doping rule violation and whether the *Athlete* tested negative in the other *Competitions*.

10.1.1 If the *Athlete* establishes that he or she bears *No Fault or Negligence* for the violation, the *Athlete's* individual results in the other *Competition*s shall not be *Disqualified*, unless the *Athlete's* results in *Competition*s other than the *Competition* in which the anti-doping rule violation occurred were likely to have been affected by the *Athlete's* anti-doping rule violation.

10.2 *Ineligibility* for Presence, *Use* or *Attempted Use*, or *Possession* of a *Prohibited Substance* or *Prohibited Method*

The period of *Ineligibility* for a violation of Articles 2.1, 2.2 or 2.6 shall be as follows, subject to potential reduction or suspension pursuant to Articles 10.4, 10.5 or 10.6:

10.2.1 The period of *Ineligibility* shall be four years where:

10.2.1.1 The anti-doping rule violation does not involve a *Specified Substance*, unless the *Athlete* or other *Person* can establish that the anti-doping rule violation was not intentional.

10.2.1.2 The anti-doping rule violation involves a *Specified Substance* and the ISSF can establish that the anti-doping rule violation was intentional.

10.2.2 If Article 10.2.1 does not apply, the period of *Ineligibility* shall be two years.

EDITION 2017 | Second Print 01/2018
Copyright: ISSF

10.2.3 As used in Articles 10.2 and 10.3, the term "intentional" is meant to identify those *Athletes* who cheat. The term therefore requires that the *Athlete* or other *Person* engaged in conduct which he or she knew constituted an anti-doping rule violation or knew that there was a significant risk that the conduct might constitute or result in an anti-doping rule violation and manifestly disregarded that risk. An anti-doping rule violation resulting from an *Adverse Analytical Finding* for a substance which is only prohibited *In-Competition* shall be rebuttably presumed to be not intentional if the substance is a *Specified Substance and* the *Athlete* can establish that the *Prohibited Substance* was *Used Out-of-Competition*. An anti-doping rule violation resulting from an *Adverse Analytical Finding* for a substance which is only prohibited *In-Competition* shall not be considered intentional if the substance is not a *Specified Substance* and the *Athlete* can establish that the *Prohibited Substance* was *Used Out-of-Competition* in a context unrelated to sport performance.

10.3 *Ineligibility* for Other Anti-Doping Rule Violations

The period of *Ineligibility* for anti-doping rule violations other than as provided in Article 10.2 shall be as follows, unless Articles 10.5 or 10.6 are applicable:

10.3.1 For violations of Article 2.3 or Article 2.5, the period of *Ineligibility* shall be four years unless, in the case of failing to submit to *Sample* collection, the *Athlete* can establish that the commission of the anti-doping rule violation was not intentional (as defined in Article 10.2.3), in which case the period of *Ineligibility* shall be two years.

10.3.2 For violations of Article 2.4, the period of *Ineligibility* shall be two years, subject to reduction down to a minimum of one year, depending on the *Athlete*'s degree of *Fault*. The flexibility between two years and one year of *Ineligibility* in this Article is not available to *Athletes* where a pattern of last-minute whereabouts changes or other conduct raises a serious suspicion that the *Athlete* was trying to avoid being available for *Testing*.

10.3.3 For violations of Article 2.7 or 2.8, the period of *Ineligibility* shall be a minimum of four years up to lifetime *Ineligibility*, depending on the seriousness of the violation. An Article 2.7 or Article 2.8 violation involving a *Minor* shall be considered a particularly serious violation and, if committed by *Athlete Support Personnel* for violations other than for *Specified Substances*, shall result in lifetime *Ineligibility* for *Athlete Support Personnel*. In addition, significant violations of Article 2.7 or 2.8 which may also violate non-sporting laws and regulations, shall be reported to the competent administrative, professional or judicial authorities.

10.3.4 For violations of Article 2.9, the period of *Ineligibility* imposed shall be a minimum of two years, up to four years, depending on the seriousness of the violation.

10.3.5 For violations of Article 2.10, the period of *Ineligibility* shall be two years, subject to reduction down to a minimum of one year, depending on the *Athlete* or other *Person*'s degree of *Fault* and other circumstances of the case.

Copyright: ISSF

10.4 Elimination of the Period of *Ineligibility* where there is *No Fault or Negligence*

If an *Athlete* or other *Person* establishes in an individual case that he or she bears *No Fault or Negligence*, then the otherwise applicable period of *Ineligibility* shall be eliminated.

10.5 Reduction of the Period of *Ineligibility* based on *No Significant Fault or Negligence*

10.5.1 Reduction of Sanctions for *Specified Substances* or *Contaminated Products* for Violations of Article 2.1, 2.2 or 2.6.

10.5.1.1 *Specified Substances*

Where the anti-doping rule violation involves a *Specified Substance*, and the *Athlete* or other *Person* can establish *No Significant Fault or Negligence*, then the period of *Ineligibility* shall be, at a minimum, a reprimand and no period of *Ineligibility*, and at a maximum, two years of *Ineligibility*, depending on the *Athlete*'s or other *Person*'s degree of *Fault*.

10.5.1.2 *Contaminated Products*

In cases where the *Athlete* or other *Person* can establish *No Significant Fault or Negligence* and that the detected *Prohibited Substance* came from a *Contaminated Product*, then the period of *Ineligibility* shall be, at a minimum, a reprimand and no period of *Ineligibility*, and at a maximum, two years *Ineligibility*, depending on the *Athlete*'s or other *Person*'s degree of *Fault*.

10.5.2 Application of *No Significant Fault or Negligence* beyond the Application of Article 10.5.1

If an *Athlete* or other *Person* establishes in an individual case where Article 10.5.1 is not applicable that he or she bears *No Significant Fault or Negligence*, then, subject to further reduction or elimination as provided in Article 10.6, the otherwise applicable period of *Ineligibility* may be reduced based on the *Athlete* or other *Person's* degree of *Fault*, but the reduced period of *Ineligibility* may not be less than one-half of the period of *Ineligibility* otherwise applicable. If the otherwise applicable period of *Ineligibility* is a lifetime, the reduced period under this Article may be no less than eight years.

10.6 Elimination, Reduction, or Suspension of Period of *Ineligibility* or other *Consequences* for Reasons Other than *Fault*

10.6.1 *Substantial Assistance* in Discovering or Establishing Anti-Doping Rule Violations

EDITION 2017 | Second Print 01/2018
Copyright: ISSF

10.6.1.1 The ISSF may, prior to a final appellate decision under Article 13 or the expiration of the time to appeal, suspend a part of the period of *Ineligibility* imposed in an individual case in which it has results management authority where the *Athlete* or other *Person* has provided *Substantial Assistance* to an *Anti-Doping Organization*, criminal authority or professional disciplinary body which results in: (i) the *Anti-Doping Organization* discovering or bringing forward an anti-doping rule violation by another *Person*, or (ii) which results in a criminal or disciplinary body discovering or bringing forward a criminal offense or the breach of professional rules committed by another *Person* and the information provided by the *Person* providing *Substantial Assistance* is made available to the ISSF. After a final appellate decision under Article 13 or the expiration of time to appeal, the ISSF may only suspend a part of the otherwise applicable period of *Ineligibility* with the approval of *WADA*. The extent to which the otherwise applicable period of *Ineligibility* may be suspended shall be based on the seriousness of the anti-doping rule violation committed by the *Athlete* or other *Person* and the significance of the *Substantial Assistance* provided by the *Athlete* or other *Person* to the effort to eliminate doping in sport. No more than three-quarters of the otherwise applicable period of *Ineligibility* may be suspended. If the otherwise applicable period of *Ineligibility* is a lifetime, the non-suspended period under this Article must be no less than eight years. If the *Athlete* or other *Person* fails to continue to cooperate and to provide the complete and credible *Substantial Assistance* upon which a suspension of the period of *Ineligibility* was based, the ISSF shall reinstate the original period of *Ineligibility*. If the ISSF decides to reinstate a suspended period of *Ineligibility* or decides not to reinstate a suspended period of *Ineligibility*, that decision may be appealed by any *Person* entitled to appeal under Article 13.

10.6.1.2 To further encourage *Athletes* and other *Persons* to provide *Substantial Assistance* to *Anti-Doping Organizations*, at the request of the ISSF or at the request of the *Athlete* or other *Person* who has (or has been asserted to have) committed an anti-doping rule violation, *WADA* may agree at any stage of the results management process, including after a final appellate decision under Article 13, to what it considers to be an appropriate suspension of the otherwise-applicable period of *Ineligibility* and other *Consequences*. In exceptional circumstances, *WADA* may agree to suspensions of the period of *Ineligibility* and other *Consequences* for *Substantial Assistance* greater than those otherwise provided in this Article, or even no period of *Ineligibility*, and/or no return of prize money or payment of fines or costs. *WADA*'s approval shall be subject to reinstatement of sanction, as otherwise provided in this Article. Notwithstanding Article 13, *WADA*'s decisions in the context of this Article may not be appealed by any other *Anti-Doping Organization*.

Copyright: ISSF

10.6.1.3 If the ISSF suspends any part of an otherwise applicable sanction because of *Substantial Assistance*, then notice providing justification for the decision shall be provided to the other *Anti-Doping Organizations* with a right to appeal under Article 13.2.3 as provided in Article 15.2. In unique circumstances where *WADA* determines that it would be in the best interest of anti-doping, *WADA* may authorize the ISSF to enter into appropriate confidentiality agreements limiting or delaying the disclosure of the *Substantial Assistance* agreement or the nature of *Substantial Assistance* being provided.

10.6.2 Admission of an Anti-Doping Rule Violation in the Absence of Other Evidence

Where an *Athlete* or other *Person* voluntarily admits the commission of an anti-doping rule violation before having received notice of a *Sample* collection which could establish an anti-doping rule violation (or, in the case of an anti-doping rule violation other than Article 2.1, before receiving first notice of the admitted violation pursuant to Article 7) and that admission is the only reliable evidence of the violation at the time of admission, then the period of *Ineligibility* may be reduced, but not below one-half of the period of *Ineligibility* otherwise applicable.

10.6.3 Prompt Admission of an Anti-Doping Rule Violation after being Confronted with a Violation Sanctionable under Article 10.2.1 or Article 10.3.1

An *Athlete* or other *Person* potentially subject to a four-year sanction under Article 10.2.1 or 10.3.1 (for evading or refusing *Sample Collection* or *Tampering* with *Sample Collection*), by promptly admitting the asserted anti-doping rule violation after being confronted by the ISSF and also upon the approval and at the discretion of both *WADA* and the ISSF, may receive a reduction in the period of *Ineligibility* down to a minimum of two years, depending on the seriousness of the violation and the *Athlete* or other *Person's* degree of *Fault*.

10.6.4 Application of Multiple Grounds for Reduction of a Sanction

Where an *Athlete* or other *Person* establishes entitlement to reduction in sanction under more than one provision of Article 10.4, 10.5 or 10.6, before applying any reduction or suspension under Article 10.6, the otherwise applicable period of *Ineligibility* shall be determined in accordance with Articles 10.2, 10.3, 10.4, and 10.5. If the *Athlete* or other *Person* establishes entitlement to a reduction or suspension of the period of *Ineligibility* under Article 10.6, then the period of *Ineligibility* may be reduced or suspended, but not below one-fourth of the otherwise applicable period of *Ineligibility*.

EDITION 2017 | Second Print 01/2018
Copyright: ISSF

10.7 Multiple Violations

10.7.1 For an *Athlete* or other *Person*'s second anti-doping rule violation, the period of *Ineligibility* shall be the greater of:

a) six months;

b) one-half of the period of *Ineligibility* imposed for the first anti-doping rule violation without taking into account any reduction under Article 10.6; or

c) twice the period of *Ineligibility* otherwise applicable to the second anti-doping rule violation treated as if it were a first violation, without taking into account any reduction under Article 10.6.

The period of *Ineligibility* established above may then be further reduced by the application of Article 10.6.

10.7.2 A third anti-doping rule violation will always result in a lifetime period of *Ineligibility*, except if the third violation fulfills the condition for elimination or reduction of the period of *Ineligibility* under Article 10.4 or 10.5, or involves a violation of Article 2.4. In these particular cases, the period of *Ineligibility* shall be from eight years to lifetime *Ineligibility*.

10.7.3 An anti-doping rule violation for which an *Athlete* or other *Person* has established *No Fault or Negligence* shall not be considered a prior violation for purposes of this Article.

10.7.4 Additional Rules for Certain Potential Multiple Violations

10.7.4.1 For purposes of imposing sanctions under Article 10.7, an anti-doping rule violation will only be considered a second violation if the ISSF can establish that the *Athlete* or other *Person* committed the second anti-doping rule violation after the *Athlete* or other *Person* received notice pursuant to Article 7, or after the ISSF made reasonable efforts to give notice of the first anti-doping rule violation. If the ISSF cannot establish this, the violations shall be considered together as one single first violation, and the sanction imposed shall be based on the violation that carries the more severe sanction.

10.7.4.2 If, after the imposition of a sanction for a first anti-doping rule violation, the ISSF discovers facts involving an anti-doping rule violation by the *Athlete* or other *Person* which occurred prior to notification regarding the first violation, then the ISSF shall impose an additional sanction based on the sanction that could have been imposed if the two violations had been adjudicated at the same time. Results in all *Competitions* dating back to the earlier anti-doping rule violation will be *Disqualified* as provided in Article 10.8.

Copyright: ISSF

10.7.5 Multiple Anti-Doping Rule Violations during Ten-Year Period

For purposes of Article 10.7, each anti-doping rule violation must take place within the same ten-year period in order to be considered multiple violations.

10.8 *Disqualification* of Results in *Competitions* Subsequent to *Sample* Collection or Commission of an Anti-Doping Rule Violation

In addition to the automatic *Disqualification* of the results in the *Competition* which produced the positive *Sample* under Article 9, all other competitive results of the *Athlete* obtained from the date a positive *Sample* was collected (whether *In-Competition* or *Out-of-Competition*), or other anti-doping rule violation occurred, through the commencement of any *Provisional Suspension* or *Ineligibility* period, shall, unless fairness requires otherwise, be *Disqualified* with all of the resulting *Consequences* including forfeiture of any medals, points and prizes.

10.9 Allocation of *CAS* Cost Awards and Forfeited Prize Money

The priority for repayment of *CAS* cost awards and forfeited prize money shall be: first, payment of costs awarded by *CAS*; and second, reimbursement of the expenses of the ISSF.

10.10 Financial Consequences

Where an *Athlete* or other *Person* commits an anti-doping rule violation, the ISSF may, in its discretion and subject to the principle of proportionality, elect to a) recover from the *Athlete* or other *Person* costs associated with the anti-doping rule violation, regardless of the period of *Ineligibility* imposed and/or b) fine the *Athlete* or other *Person* in an amount up to $5,000 U.S. Dollars, only in cases where the maximum period of *Ineligibility* otherwise applicable has already been imposed.

The imposition of a financial sanction or the ISSF's recovery of costs shall not be considered a basis for reducing the *Ineligibility* or other sanction which would otherwise be applicable under these Anti-Doping Rules or the *Code*.

10.11 Commencement of *Ineligibility* Period

Except as provided below, the period of *Ineligibility* shall start on the date of the final hearing decision providing for *Ineligibility* or, if the hearing is waived or there is no hearing, on the date *Ineligibility* is accepted or otherwise imposed.

EDITION 2017 | Second Print 01/2018
Copyright: ISSF

10.11.1 Delays Not Attributable to the *Athlete* or other *Person*

Where there have been substantial delays in the hearing process or other aspects of *Doping Control* not attributable to the *Athlete* or other *Person*, the ISSF may start the period of *Ineligibility* at an earlier date commencing as early as the date of *Sample* collection or the date on which another anti-doping rule violation last occurred. All competitive results achieved during the period of *Ineligibility*, including retroactive *Ineligibility*, shall be *Disqualified*.

10.11.2 Timely Admission

Where the *Athlete* or other *Person* promptly (which, in all events, for an *Athlete* means before the *Athlete* competes again) admits the anti-doping rule violation after being confronted with the anti-doping rule violation by the ISSF, the period of *Ineligibility* may start as early as the date of *Sample* collection or the date on which another anti-doping rule violation last occurred. In each case, however, where this Article is applied, the *Athlete* or other *Person* shall serve at least one-half of the period of *Ineligibility* going forward from the date the *Athlete* or other *Person* accepted the imposition of a sanction, the date of a hearing decision imposing a sanction, or the date the sanction is otherwise imposed. This Article shall not apply where the period of *Ineligibility* has already been reduced under Article 10.6.3.

10.11.3 Credit for *Provisional Suspension* or Period of *Ineligibility* Served

10.11.3.1 If a *Provisional Suspension* is imposed and respected by the *Athlete* or other *Person*, then the *Athlete* or other *Person* shall receive a credit for such period of *Provisional Suspension* against any period of *Ineligibility* which may ultimately be imposed. If a period of *Ineligibility* is served pursuant to a decision that is subsequently appealed, then the *Athlete* or other *Person* shall receive a credit for such period of *Ineligibility* served against any period of *Ineligibility* which may ultimately be imposed on appeal.

10.11.3.2 If an *Athlete* or other *Person* voluntarily accepts a *Provisional Suspension* in writing from the ISSF and thereafter respects the *Provisional Suspension*, the *Athlete* or other *Person* shall receive a credit for such period of voluntary *Provisional Suspension* against any period of *Ineligibility* which may ultimately be imposed. A copy of the *Athlete* or other *Perso*n's voluntary acceptance of a *Provisional Suspension* shall be provided promptly to each party entitled to receive notice of an asserted anti-doping rule violation under Article 15.1.

10.11.3.3 No credit against a period of *Ineligibility* shall be given for any time period before the effective date of the *Provisional Suspension* or voluntary *Provisional Suspension* regardless of whether the *Athlete* elected not to compete or was suspended by his or her team.

Copyright: ISSF

10.11.3.4 In *Team Sports*, where a period of *Ineligibility* is imposed upon a team, unless fairness requires otherwise, the period of *Ineligibility* shall start on the date of the final hearing decision providing for *Ineligibility* or, if the hearing is waived, on the date *Ineligibility* is accepted or otherwise imposed. Any period of team *Provisional Suspension* (whether imposed or voluntarily accepted) shall be credited against the total period of *Ineligibility* to be served.

10.12 Status During *Ineligibility*

10.12.1 Prohibition Against Participation During *Ineligibility*

No *Athlete* or other *Person* who has been declared *Ineligible* may, during the period of *Ineligibility*, participate in any capacity in a *Competition* or activity (other than authorized anti-doping education or rehabilitation programs) authorized or organized by the ISSF or any *National Federation* or a club or other member organization of the ISSF or any *National Federation*, or in *Competitions* authorized or organized by any professional league or any international or national level *Event* organization or any elite or national-level sporting activity funded by a governmental agency.

An *Athlete* or other *Person* subject to a period of *Ineligibility* longer than four years may, after completing four years of the period of *Ineligibility*, participate as an *Athlete* in local sport events not sanctioned or otherwise under the jurisdiction of a *Code Signatory* or member of a *Code Signatory*, but only so long as the local sport event is not at a level that could otherwise qualify such *Athlete* or other *Person* directly or indirectly to compete in (or accumulate points toward) a national championship or *International Event*, and does not involve the *Athlete* or other *Person* working in any capacity with *Minors*.

An *Athlete* or other *Person* subject to a period of *Ineligibility* shall remain subject to *Testing*.

10.12.2 Return to Training

As an exception to Article 10.12.1, an *Athlete* may return to train with a team or to use the facilities of a club or other member organization of ISSF*'s* member organization during the shorter of: (1) the last two months of the *Athlete's* period of *Ineligibility*, or (2) the last one-quarter of the period of *Ineligibility* imposed.

EDITION 2017 | Second Print 01/2018
Copyright: ISSF

10.12.3 Violation of the Prohibition of Participation During *Ineligibility*

Where an *Athlete* or other *Person* who has been declared *Ineligible* violates the prohibition against participation during *Ineligibility* described in Article 10.12.1, the results of such participation shall be *Disqualified* and a new period of *Ineligibility* equal in length up to the original period of *Ineligibility* shall be added to the end of the original period of *Ineligibility*. The new period of *Ineligibility* may be adjusted based on the *Athlete* or other *Person*'s degree of *Fault* and other circumstances of the case. The determination of whether an *Athlete* or other *Person* has violated the prohibition against participation, and whether an adjustment is appropriate, shall be made by the ISSF.This decision may be appealed under Article 13.

Where an *Athlete Support Person* or other *Person* assists a *Person* in violating the prohibition against participation during *Ineligibility*, the ISSF shall impose sanctions for a violation of Article 2.9 for such assistance.

10.12.4 Withholding of Financial Support during *Ineligibility*

In addition, for any anti-doping rule violation not involving a reduced sanction as described in Article 10.4 or 10.5, some or all sport-related financial support or other sport-related benefits received by such *Person* will be withheld by the ISSF and its *National Federations*.

10.13 Automatic Publication of Sanction

A mandatory part of each sanction shall include automatic publication, as provided in Article 15.3.

11 *CONSEQUENCES* TO TEAMS

11.1 *Testing* of Teams

Where one member of a team (outside of *Team Sports*) has been notified of an anti-doping rule violation under Article 7 in connection with an *Event*, the ruling body for the *Event* shall conduct appropriate *Target Testing* of all members of the team during the *Event Period*.

11.2 *Consequences* for Teams

11.2.1 An anti-doping rule violation committed by a member of a team in connection with an *In-Competition* test automatically leads to *Disqualification* of the result obtained by the team in that *Competition*, with all resulting consequences for the team and its members, including forfeiture of any medals, points and prizes.

Copyright: ISSF

11.2.2 An anti-doping rule violation committed by a member of a team occurring during or in connection with an *Event* may lead to *Disqualification* of all of the results obtained by the team in that *Event* with all consequences for the team and its members, including forfeiture of all medals, points and prizes, except as provided in Article 11.2.3.

11.2.3 Where an *Athlete* who is a member of a team committed an anti-doping rule violation during or in connection with one *Competition* in an *Event,* if the other member(s) of the team establish(es) that he/she/they bear(s) *No Fault or Negligence* for that violation, the results of the team in any other *Competition(s)* in that *Event* shall not be *Disqualified* unless the results of the team in the *Competition(s)* other than the *Competition* in which the anti-doping rule violation occurred were likely to have been affected by the *Athlete's* anti-doping rule violation.

12 SANCTIONS AND COSTS ASSESSED AGAINST SPORTING BODIES

12.1 The ISSF has the authority to withhold some or all funding or other non-financial support to *National Federations* that are not in compliance with these Anti-Doping Rules.

12.2 *National Federations* shall be obligated to reimburse the ISSF for all costs (including but not limited to laboratory fees, hearing expenses and travel) related to a violation of these Anti-Doping Rules committed by an *Athlete* or other *Person* affiliated with that *National Federation*.

12.3 The ISSF Executive Committee may elect to take additional disciplinary action against *National Federations* with respect to recognition, the eligibility of its officials and *Athletes* to participate in International Events and fines based on the following:

12.3.1 Four or more violations of these Anti-Doping Rules (other than violations involving Article 2.4) are committed by *Athletes* or other *Persons* affiliated with a *National Federation* within a 12-month period in testing conducted by the ISSF or *Anti-Doping Organizations* other than the *National Federation* or its *National Anti-Doping Organization*. In such event the ISSF Executive Committee may in its discretion elect to: (a) ban all officials from that *National Federation* for participation in any ISSF activities for a period of up to two years and/or (b) fine the *National Federation* in an amount up to $ 10,000 U.S. Dollars. (For purposes of this Rule, any fine paid pursuant to Rule 12.3.2 shall be credited against any fine assessed.)

EDITION 2017 | Second Print 01/2018
Copyright: ISSF

12.3.1.1 If four or more violations of these Anti-Doping Rules (other than violations involving Articles 2.4) are committed in addition to the violations described in Article 12.3.1 by *Athletes* or other *Persons* affiliated with a *National Federation* within a 12-month period in *Testing* conducted by the ISSF or *Anti-Doping Organizations* other than the *National Federation* or its *National Anti-Doping Organization,* then the ISSF Executive Committee may suspend that *National Federation's* membership for a period of up to 4 years.

12.3.2 More than one *Athlete* or other *Person* from a *National Federation* commits an *Anti-Doping Rule* violation during an *International Event.* In such event the ISSF Executive Committee may fine that *National Federation* in an amount up to $ 10,000 U.S. Dollars.

12.3.3 A *National Federation* has failed to make diligent efforts to keep the ISSF informed about an *Athlete's* whereabouts after receiving a request for that information from the ISSF. In such event the ISSF Executive Committee may fine the *National Federation* in an amount up to $ 5,000 U.S. Dollars per *Athlete* in addition to all of the ISSF's costs incurred in *Testing* that *National Federation's Athletes*.

13 APPEALS

13.1 Decisions Subject to Appeal

Decisions made under these Anti-Doping Rules may be appealed as set forth below in Article 13.2 through 13.7 or as otherwise provided in these Anti-Doping Rules, the *Code* or the *International Standards*. Such decisions shall remain in effect while under appeal unless the appellate body orders otherwise. Before an appeal is commenced, any post-decision review provided in the *Anti-Doping Organization*'s rules must be exhausted, provided that such review respects the principles set forth in Article 13.2.2 below (except as provided in Article 13.1.3).

13.1.1 Scope of Review Not Limited

The scope of review on appeal includes all issues relevant to the matter and is expressly not limited to the issues or scope of review before the initial decision maker.

13.1.2 *CAS* Shall Not Defer to the Findings Being Appealed

In making its decision, *CAS* need not give deference to the discretion exercised by the body whose decision is being appealed.

13.1.3 *WADA* Not Required to Exhaust Internal Remedies

Where *WADA* has a right to appeal under Article 13 and no other party has appealed a final decision within the ISSF's process, *WADA* may appeal such decision directly to *CAS* without having to exhaust other remedies in the ISSF's process.

Copyright: ISSF

13.2 Appeals from Decisions Regarding Anti-Doping Rule Violations, *Consequences*, *Provisional Suspensions,* Recognition of Decisions and Jurisdiction

A decision that an anti-doping rule violation was committed, a decision imposing *Consequences* or not imposing *Consequences* for an anti-doping rule violation, or a decision that no anti-doping rule violation was committed; a decision that an anti-doping rule violation proceeding cannot go forward for procedural reasons (including, for example, prescription); a decision by *WADA* not to grant an exception to the six months' notice requirement for a retired *Athlete* to return to *Competition* under Article 5.7.1; a decision by *WADA* assigning results management under Article 7.1 of the *Code*; a decision by the ISSF not to bring forward an *Adverse Analytical Finding* or an *Atypical Finding* as an anti-doping rule violation, or a decision not to go forward with an anti-doping rule violation after an investigation under Article 7.7; a decision to impose a *Provisional Suspension* as a result of a *Provisional Hearing* the ISSF's failure to comply with Article 7.9; a decision that the ISSF lacks jurisdiction to rule on an alleged anti-doping rule violation or its *Consequences*; a decision to suspend, or not suspend, a period of *Ineligibility* or to reinstate, or not reinstate, a suspended period of *Ineligibility* under Article 10.6.1; a decision under Article 10.12.3; and a decision by the ISSF not to recognize another *Anti-Doping Organization*'s decision under Article 14, may be appealed exclusively as provided in Articles 13.2 – 13.7.

13.2.1 Appeals Involving *International-Level Athletes* or *International Events*

In cases arising from participation in an *International Event* or in cases involving *International-Level Athletes*, the decision may be appealed exclusively to *CAS*.

13.2.2 Appeals Involving Other *Athletes* or Other *Persons*

In cases where Article 13.2.1 is not applicable, the decision may be appealed to a national-level appeal body, being an independent and impartial body established in accordance with rules adopted by the *National Anti-Doping Organization* having jurisdiction over the *Athlete* or other *Person*. The rules for such appeal shall respect the following principles: a timely hearing; a fair and impartial hearing panel; the right to be represented by counsel at the *Person*'s own expense; and a timely, written, reasoned decision. If the *National Anti-Doping Organization* has not established such a body, the decision may be appealed to *CAS* in accordance with the provisions applicable before such court.

EDITION 2017 | Second Print 01/2018
Copyright: ISSF

13.2.3 *Persons* Entitled to Appeal

In cases under Article 13.2.1, the following parties shall have the right to appeal to *CAS*: (a) the *Athlete* or other *Person* who is the subject of the decision being appealed; (b) the other party to the case in which the decision was rendered; (c) the ISSF; (d) the *National Anti-Doping Organization* of the *Person's* country of residence or countries where the *Person* is a national or license holder; (e) the International Olympic Committee or International Paralympic Committee, as applicable, where the decision may have an effect in relation to the Olympic Games or Paralympic Games, including decisions affecting eligibility for the Olympic Games or Paralympic Games; and (f) *WADA*.

In cases under Article 13.2.2, the parties having the right to appeal to the national-level appeal body shall be as provided in the *National Anti-Doping Organization*'s rules but, at a minimum, shall include the following parties: (a) the *Athlete* or other *Person* who is the subject of the decision being appealed; (b) the other party to the case in which the decision was rendered; (c) the ISSF; (d) the *National Anti-Doping Organization* of the *Person*'s country of residence; (e) the International Olympic Committee or International Paralympic Committee, as applicable, where the decision may have an effect in relation to the Olympic Games or Paralympic Games, including decisions affecting eligibility for the Olympic Games or Paralympic Games; and (f) *WADA*. For cases under Article 13.2.2, *WADA*, the International Olympic Committee, the International Paralympic Committee, and the ISSF shall also have the right to appeal to *CAS* with respect to the decision of the national-level appeal body. Any party filing an appeal shall be entitled to assistance from *CAS* to obtain all relevant information from the *Anti-Doping Organization* whose decision is being appealed and the information shall be provided if *CAS* so directs.

Notwithstanding any other provision herein, the only *Person* who may appeal from a *Provisional Suspension* is the *Athlete* or other *Person* upon whom the *Provisional Suspension* is imposed.

13.2.4 Cross Appeals and other Subsequent Appeals Allowed

Cross appeals and other subsequent appeals by any respondent named in cases brought to *CAS* under the *Code* are specifically permitted. Any party with a right to appeal under this Article 13 must file a cross appeal or subsequent appeal at the latest with the party's answer.

Copyright: ISSF

13.3 Failure to Render a Timely Decision

Where, in a particular case, the ISSF fails to render a decision with respect to whether an anti-doping rule violation was committed within a reasonable deadline set by *WADA*, *WADA* may elect to appeal directly to *CAS* as if the ISSF had rendered a decision finding no anti-doping rule violation. If the *CAS* hearing panel determines that an anti-doping rule violation was committed and that *WADA* acted reasonably in electing to appeal directly to *CAS*, then *WADA*'s costs and attorney fees in prosecuting the appeal shall be reimbursed to *WADA* by the ISSF.

13.4 Appeals Relating to *TUEs*

TUE decisions may be appealed exclusively as provided in Article 4.4.

13.5 Notification of Appeal Decisions

Any *Anti-Doping Organization* that is a party to an appeal shall promptly provide the appeal decision to the *Athlete* or other *Person* and to the other *Anti-Doping Organizations* that would have been entitled to appeal under Article 13.2.3 as provided under Article 15.2.

13.6 Appeal from Decisions Pursuant to Article 12

Decisions by the ISSF pursuant to Article 12 may be appealed exclusively to *CAS* by the *National Federation*.

EDITION 2017 | Second Print 01/2018
Copyright: ISSF

13.7 Time for Filing Appeals

13.7.1 Appeals to *CAS*

The time to file an appeal to *CAS* shall be twenty-one days from the date of receipt of the decision by the appealing party. The above notwithstanding, the following shall apply in connection with appeals filed by a party entitled to appeal but which was not a party to the proceedings that led to the decision being appealed:

a) Within fifteen days from notice of the decision, such party/ies shall have the right to request a copy of the case file from the body that issued the decision;

b) If such a request is made within the fifteen-day period, then the party making such request shall have twenty-one days from receipt of the file to file an appeal to CAS.

The above notwithstanding, the filing deadline for an appeal filed by *WADA* shall be the later of:

c) Twenty-one days after the last day on which any other party in the case could have appealed; or

d) Twenty-one days after *WADA*'s receipt of the complete file relating to the decision.

13.7.2 Appeals Under Article 13.2.2

The time to file an appeal to an independent and impartial body established at national level in accordance with rules established by the *National Anti-Doping Organization* shall be indicated by the same rules of the *National Anti-Doping Organization*.

The above notwithstanding, the filing deadline for an appeal or intervention filed by *WADA* shall be the later of:

- Twenty-one days after the last day on which any other party in the case could have appealed, or
- Twenty-one days after *WADA*'s receipt of the complete file relating to the decision.

14 ISSF RIGHT OF REVIEW

14.1 The ISSF Executive Committee's right to review a *National Federation*'s decision that is clearly not in compliance with the *Code* is consistent with the requirement that the principles of these Anti-Doping Rules and the *Code* must be respected and properly implemented.

Copyright: ISSF

14.2 In the event of an anti-doping rule violation within the jurisdiction of an ISSF *National Federation,* the ISSF Executive Committee, upon the completion of the Commission of Inquiry's investigation, is authorized to review a sanction, propose and/or transfer the matter to the ISSF Anti-Doping Hearing Panel who shall impose a modified sanction according to these Anti-Doping Rules if :

a) the ISSF *National Federation* fails to do so, or

b) the sanction imposed by the *National Federation* is clearly not in compliance with the *Code*.

14.3 Once the ISSF Commission of Inquiry has reviewed the *National Federation*'s disciplinary panel decision it may, prior to and/or in lieu of appealing the faulty decision, make recommendations to the *National Federation* on the initial decision and grant the *National Federation's* disciplinary panel the opportunity to revise the decision based on a proper application of the provisions of these Anti-Doping Rules and the *Code*. A *National Federation's* subsequent refusal to revise the decision accordingly shall result in the ISSF or *WADA*'s right to exercise an appeal before *CAS*, at the *National Federation's* costs if successful, in accordance with Article 13.

14.4 When a *National Federation* fails to conduct proper or timely results management procedures, the ISSF Executive Committee shall transfer the matter to the ISSF Anti-Doping Hearing Panel who shall decide whether and to what extent a sanction shall be imposed on a *National-Level Athlete* whose doping control has yielded an *Adverse Analytical Finding* provided that the ISSF Commission of Inquiry is satisfied that all the *Doping Control* procedures were properly carried out and that the implicated *Athlete* has the right to be heard in accordance with Article 8. The *Athlete* in question may be suspended provisionally before a documentary hearing takes place and a sanction is imposed if a provisional suspension has not yet been imposed.

15 CONFIDENTIALITY AND REPORTING

15.1 Information Concerning *Adverse Analytical Findings*, *Atypical Findings*, and Other Asserted Anti-Doping Rule Violations

15.1.1 Notice of Anti-Doping Rule Vio*lation*s to *Athlete*s and other *Person*s

Notice to *Athletes or other Persons* of anti-doping rule violations asserted against them shall occur a*s provided unde*r Articles 7 and 15 of these Anti-Doping Rules. Notice to an *Athlete* or other *Person* who is a member of a *National Federation* ma*y be ac*complished by delivery of the notice to the *National Federation*.

EDITION 2017 | Second Print 01/2018
Copyright: ISSF

15.1.2 Notice of Anti-Doping Rule Violations to *National Anti-Doping Organizations* and *WADA*

Notice of the assertion of an anti-doping rule violation to *National Anti-Doping Organizations* and *WADA* shall occur as provided under Articles 7 and 15 of these Anti-Doping Rules, simultaneously with the notice to the *Athlete* or other *Person*.

15.1.3 Content of an Anti-Doping Rule Violation Notice

Notification of an anti-doping rule violation under Article 2.1 shall include: the *Athlete*'s name, country, sport and discipline within the sport, the *Athlete*'s competitive level, whether the test was *In-Competition* or *Out-of-Competition*, the date of *Sample* collection, the analytical result reported by the laboratory, and other information as required by the International Standard for Testing and Investigations.

Notice of anti-doping rule violations other than under Article 2.1 shall include the rule violated and the basis of the asserted violation.

15.1.4 Status Reports

Except with respect to investigations which have not resulted in notice of an anti-doping rule violation pursuant to Article 15.1.1, *National Anti-Doping Organization*s and *WADA* shall be regularly updated on the status and findings of any review or proceedings conducted pursuant to Article 7, 8 or 13 and shall be provided with a prompt written reasoned explanation or decision explaining the resolution of the matter.

15.1.5 Confidentiality

The recipient organizations shall not disclose this information beyond those *Person*s with a need to know (which would include the appropriate personnel at the applicable *National Olympic Committee*, *National Federation*, and team in a *Team Sport*) until the ISSF has made *Public Disclosure* or has failed to make *Public Disclosure* as required in Article 15.3.

15.2 Notice of Anti-Doping Rule Violation Decisions and Request for Files

15.2.1 Anti-doping rule violation decisions rendered pursuant to Article 7.11, 8.2, 10.4, 10.5, 10.6, 10.12.3 or 13.5 shall include the full reasons for the decision, including, if applicable, a justification for why the greatest possible *Consequences* were not imposed. Where the decision is not in English or French, the ISSF shall provide a short English or French summary of the decision and the supporting reasons.

15.2.2 An *Anti-Doping Organization* having a right to appeal a decision received pursuant to Article 15.2.1 may, within fifteen days of receipt, request a copy of the full case file pertaining to the decision.

Copyright: ISSF

15.3 *Public Disclosure*

15.3.1 The identity of any *Athlete* or other *Person* who is asserted by the ISSF to have committed an anti-doping rule violation may be *Publicly Disclose*d by the ISSF only after notice has been provided to the *Athlete* or other *Person* in accordance with Article 7.3, 7.4, 7.5, 7.6 or 7.7 and simultaneously to *WADA* and the *National Anti-Doping* Organization of *the* Athlete or other *Person* in accordance with Article 15.1.2.

15.3.2 No later than twenty days after it has been determined in a final appellate decision under Article 13.2.1 or 13.2.2, or such appeal has been waived, or a hearing in accordance with Article 8 has been waived, or the assertion of an anti-doping rule violation has not been timely challenged, the ISSF must *Publicly Report* the disposition of the matter, including the sport, the anti-doping rule violated, the name of the *Athlete* or other *Person* committing the violation, the *Prohibited Substance* or *Prohibited Method* involved (if any), and the *Consequences* imposed. The ISSF must also *Publicly Report* within twenty days the results of final appeal decisions concerning anti-doping rule violations, including the information described above.

15.3.3 In any case where it is determined, after a hearing or appeal, that the *Athlete* or other *Person* did not commit an anti-doping rule violation, the decision may be *Publicly Disclosed* only with the consent of the *Athlete* or other *Person* who is the subject of the decision. The ISSF shall use reasonable efforts to obtain such consent. If consent is obtained, the ISSF shall *Publicly Disclose* the decision in its entirety or in such redacted form as the *Athlete* or other *Person* may approve.

15.3.4 Publication shall be accomplished at a minimum by placing the required information on the ISSF's website or publishing it through other means and leaving the information up for the longer of one month or the duration of any period of *Ineligibility*.

15.3.5 Neither the ISSF nor its *National Federations*, nor any official of either body, shall publicly comment on the specific facts of any pending case (as opposed to general description of process and science) except in response to public comments attributed to the *Athlete* or other *Person* against whom an anti-doping rule violation is asserted, or their representatives.

15.3.6 The mandatory *Public Reporting* required in Article 15.3.2 shall not be required where the *Athlete* or other *Person* who has been found to have committed an anti-doping rule violation is a *Minor*. Any optional *Public Reporting* in a case involving a *Minor* shall be proportionate to the facts and circumstances of the case.

15.4 Statistical Reporting

The ISSF shall publish at least annually a general statistical report of its *Doping Control* activities, with a copy provided to *WADA*. The ISSF may also publish reports showing the name of each *Athlete* tested and the date of each *Testing*.

EDITION 2017 | Second Print 01/2018
Copyright: ISSF

15.5 *Doping Control* Information Clearinghouse

To facilitate coordinated test distribution planning and to avoid unnecessary duplication in *Testing* by the various *Anti-Doping Organization*s, the ISSF shall report all *In-Competition* and *Out-of-Competition* tests on such *Athlete*s to the *WADA* clearinghouse, using *ADAMS*, as soon as possible after such tests have been conducted. This information will be made accessible, where appropriate and in accordance with the applicable rules, to the *Athlete*, the *Athlete*'s *National Anti-Doping Organization* and any other *Anti-Doping Organizations* with *Testing* authority over the *Athlete*.

15.6 Data Privacy

15.6.1 The ISSF may collect, store, process or disclose personal information relating to *Athlete*s and other *Persons* where necessary and appropriate to conduct their anti-doping activities under the *Code*, the *International Standards* (including specifically the International Standard for the Protection of Privacy and Personal Information) and these Anti-Doping Rules.

15.6.2 Any *Participant* who submits information including personal data to any *Person* in accordance with these Anti-Doping Rules shall be deemed to have agreed, pursuant to applicable data protection laws and otherwise, that such information may be collected, processed, disclosed and used by such *Person* for the purposes of the implementation of these Anti-Doping Rules, in accordance with the International Standard for the Protection of Privacy and Personal Information and otherwise as required to implement these Anti-Doping Rules.

16 APPLICATION AND RECOGNITION OF DECISIONS

16.1 Subject to the right to appeal provided in Article 13 and the right to review in Article 14, and to the review process described in Articles 4.4.2 and 4.4.4, *Testing*, hearing results or other final adjudications of any *Signatory* which are consistent with the *Code* and are within that *Signatory's* authority shall be applicable worldwide and shall be recognized and respected by the ISSF and all its *National Federations*.

16.2 The ISSF and its *National Federations* shall recognize the measures taken by other bodies which have not accepted the *Code* if the rules of those bodies are otherwise consistent with the *Code*.

16.3 Subject to the right to appeal provided in Article 13, any decision of the ISSF regarding a violation of these Anti-Doping Rules shall be recognized by all *National Federation*s, which shall take all necessary action to render such decision effective.

Copyright: ISSF

17 INCORPORATION OF THE ISSF'S ANTI-DOPING RULES AND OBLIGATIONS OF *NATIONAL FEDERATIONS*

17.1 All *National Federation*s and their members shall comply with these Anti-Doping Rules. All *National Federation*s and other members shall include in their regulations the provisions necessary to ensure that the ISSF may enforce these Anti-Doping Rules directly as against *Athletes* under their anti-doping jurisdiction (including *National-Level Athletes*). These Anti-Doping Rules shall also be incorporated either directly or by reference into each *National Federation's* rules so that the *National Federation* may enforce them itself directly as against *Athletes* under its anti-doping jurisdiction (including *National-Level Athletes*).

17.2 All *National Federation*s shall establish rules requiring all *Athlete*s and each *Athlete Support Personnel* who participates as coach, trainer, manager, team staff, official, medical or paramedical personnel in a *Competition* or activity authorized or organized by a *National Federation* or one of its member organizations to agree to be bound by these Anti-Doping Rules and to submit to the results management authority of the *Anti-Doping Organization* responsible under the *Code* as a condition of such participation.

17.3 All *National Federation*s shall report any information suggesting or relating to an anti-doping rule violation to the ISSF and to their *National Anti-Doping Organizations*, and shall cooperate with investigations conducted by any *Anti-Doping Organization* with authority to conduct the investigation.

17.4 All *National Federation*s shall have disciplinary rules in place to prevent *Athlete Support Personnel* who are *Using Prohibited Substances* or *Prohibited Methods* without valid justification from providing support to *Athletes* under the jurisdiction of the ISSF or the *National Federation*.

17.5 All *National Federations* shall be required to conduct anti-doping education in coordination with their *National Anti-Doping Organizations.*

18 STATUTE OF LIMITATIONS

No anti-doping rule violation proceeding may be commenced against an *Athlete* or other *Person* unless he or she has been notified of the anti-doping rule violation as provided in Article 7, or notification has been reasonably attempted, within ten years from the date the violation is asserted to have occurred.

19 ISSF COMPLIANCE REPORTS TO *WADA*

The ISSF will report to *WADA* on the ISSF's compliance with the *Code* in accordance with Article 23.5.2 of the *Code*.

EDITION 2017 | Second Print 01/2018
Copyright: ISSF

20 EDUCATION

The ISSF shall plan, implement, evaluate and monitor information, education and prevention programs for doping-free sport on at least the issues listed at Article 18.2 of the *Code*, and shall support active participation by *Athlete*s and *Athlete Support Personnel* in such programs.

21 AMENDMENT AND INTERPRETATION OF ANTI-DOPING RULES

21.1 These Anti-Doping Rules may be amended from time to time by the ISSF. All proposed amendments and modifications shall need to be approved by the Administrative Council.

21.2 These Anti-Doping Rules shall be interpreted as an independent and autonomous text and not by reference to existing law or statutes.

21.3 The headings used for the various Parts and Articles of these Anti-Doping Rules are for convenience only and shall not be deemed part of the substance of these Anti-Doping Rules or to affect in any way the language of the provisions to which they refer.

21.4 The *Code* and the *International Standards* shall be considered integral parts of these Anti-Doping Rules and shall prevail in case of conflict.

21.5 These Anti-Doping Rules have been adopted pursuant to the applicable provisions of the *Code* and shall be interpreted in a manner that is consistent with applicable provisions of the *Code*. The Introduction shall be considered an integral part of these Anti-Doping Rules.

21.6 The comments annotating various provisions of the *Code* are incorporated by reference into these Anti-Doping Rules, shall be treated as if set out in full herein, and shall be used to interpret these Anti-Doping Rules.

21.7 These Anti-Doping Rules have come into full force and effect on 1 January 2015 (the “Effective Date”). They shall not apply retroactively to matters pending before the Effective Date; provided, however, that:

21.7.1 Anti-doping rule violations taking place prior to the Effective Date count as "first violations" or "second violations" for purposes of determining sanctions under Article 10 for violations taking place after the Effective Date.

Copyright: ISSF

21.7.2 The retrospective periods in which prior violations can be considered for purposes of multiple violations under Article 10.7.5 and the statute of limitations set forth in Article 17 are procedural rules and should be applied retroactively; provided, however, that Article 17 shall only be applied retroactively if the statute of limitations period has not already expired by the Effective Date. Otherwise, with respect to any anti-doping rule violation case which is pending as of the Effective Date and any anti-doping rule violation case brought after the Effective Date based on an anti-doping rule violation which occurred prior to the Effective Date, the case shall be governed by the substantive anti-doping rules in effect at the time the alleged anti-doping rule violation occurred unless the panel hearing the case determines the principle of "lex mitior" appropriately applies under the circumstances of the case.

21.7.3 Any Article 2.4 whereabouts failure (whether a Filing Failure or a Missed Test, as those terms are defined in the International Standard for Testing and Investigations) prior to the Effective Date shall be carried forward and may be relied upon, prior to expiry, in accordance with the International Standard for Testing and Investigation, but it shall be deemed to have expired 12 months after it occurred.

21.7.4 With respect to cases where a final decision finding an anti-doping rule violation has been rendered prior to the Effective Date, but the *Athlete* or other *Person* is still serving the period of *Ineligibility* as of the Effective Date, the *Athlete* or other *Person* may apply to the *Anti-Doping Organization* which had results management responsibility for the anti-doping rule violation to consider a reduction in the period of *Ineligibility* in light of these Anti-Doping Rules. Such application must be made before the period of *Ineligibility* has expired. The decision rendered may be appealed pursuant to Article 13.2. These Anti-Doping Rules shall have no application to any case where a final decision finding an anti-doping rule violation has been rendered and the period of *Ineligibility* has expired.

21.7.5 For purposes of assessing the period of *Ineligibility* for a second violation under Article 10.7.1, where the sanction for the first violation was determined based on rules in force prior to the Effective Date, the period of *Ineligibility* which would have been assessed for that first violation had these Anti-Doping Rules been applicable, shall be applied.

22 INTERPRETATION OF THE *CODE*

22.1 The official text of the *Code* shall be maintained by *WADA* and shall be published in English and French. In the event of any conflict between the English and French versions, the English version shall prevail.

22.2 The comments annotating various provisions of the *Code* shall be used to interpret the *Code*.

EDITION 2017 | Second Print 01/2018
Copyright: ISSF

22.3 The *Code* shall be interpreted as an independent and autonomous text and not by reference to the existing law or statutes of the *Signatories* or governments.

22.4 The headings used for the various Parts and Articles of the *Code* are for convenience only and shall not be deemed part of the substance of the *Code* or to affect in any way the language of the provisions to which they refer.

22.5 The *Code* shall not apply retroactively to matters pending before the date the *Code* is accepted by a *Signatory* and implemented in its rules. However, pre-*Code* anti-doping rule violations would continue to count as "first violations" or "second violations" for purposes of determining sanctions under Article 10 for subsequent post-*Code* violations.

22.6 The Purpose, Scope and Organization of the World Anti-Doping Program and the *Code* and Appendix 1, Definitions, and Appendix 2, Examples of the Application of Article 10, shall be considered integral parts of the *Code*.

23 ADDITIONAL ROLES AND RESPONSIBILITIES OF *ATHLETES* AND OTHER *PERSONS*

23.1 Roles and Responsibilities of *Athlete*s

23.1.1 To be knowledgeable of and comply with these Anti-Doping Rules.

23.1.2 To be available for *Sample* collection at all times.

23.1.3 To take responsibility, in the context of anti-doping, for what they ingest and *Use*.

23.1.4 To inform medical personnel of their obligation not to *Use Prohibited Substance*s and *Prohibited Method*s and to take responsibility to make sure that any medical treatment received does not violate these Anti-Doping Rules.

23.1.5 To disclose to their *National Anti-Doping Organization* and to the ISSF any decision by a non-*Signatory* finding that the *Athlete* committed an anti-doping rule violation within the previous ten years.

23.1.6 To cooperate with *Anti-Doping Organizations* investigating anti-doping rule violations.

23.1.7 Failure by any *Athlete* to cooperate in full with *Anti-Doping Organizations* investigating anti-doping rule violations may result in disciplinary action being taken by the ISSF Executive Committee in accordance with the ISSF Rules and Regulations.

23.2 Roles and Responsibilities of *Athlete Support Personnel*

23.2.1 To be knowledgeable of and comply with these Anti-Doping Rules.

23.2.2 To cooperate with the *Athlete Testing* program.

Copyright: ISSF

23.2.3 To use his or her influence on *Athlete* values and behavior to foster anti-doping attitudes.

23.2.4 To disclose to his or her *National Anti-Doping Organization* and to the ISSF any decision by a non-*Signatory* finding that he or she committed an anti-doping rule violation within the previous ten years.

23.2.5 To cooperate with *Anti-Doping Organizations* investigating anti-doping rule violations.

23.2.6 Failure by any *Athlete Support Personnel* to cooperate in full with *Anti-Doping Organizations* investigating anti-doping rule violations may result in disciplinary action being taken by the ISSF Executive Committee in accordance with the ISSF Rules and Regulations.

23.2.7 *Athlete Support Personnel* shall not *Use* or *Possess* any *Prohibited Substance* or *Prohibited Method* without valid justification.

23.2.8 *Use* or *Possession* of a *Prohibited Substance* or *Prohibited Method* by an *Athlete Support Personnel* without valid justification may result in disciplinary action being taken by the ISSF Executive Committee in accordance with the ISSF Rules and Regulations.

EDITION 2017 | Second Print 01/2018
Copyright: ISSF

APPENDIX 1. DEFINITIONS

ADAMS: The Anti-Doping Administration and Management System is a Web-based database management tool for data entry, storage, sharing, and reporting designed to assist stakeholders and *WADA* in their anti-doping operations in conjunction with data protection legislation.

Administration: Providing, supplying, supervising, facilitating, or otherwise participating in the *Use* or *Attempted Use* by another *Person* of a *Prohibited Substance* or *Prohibited Method*. However, this definition shall not include the actions of bona fide medical personnel involving a *Prohibited Substance* or *Prohibited Method* used for genuine and legal therapeutic purposes or other acceptable justification and shall not include actions involving *Prohibited Substances* which are not prohibited in *Out-of-Competition Testing* unless the circumstances as a whole demonstrate that such *Prohibited Substances* are not intended for genuine and legal therapeutic purposes or are intended to enhance sport performance.

Adverse Analytical Finding: A report from a *WADA*-accredited laboratory or other *WADA*-approved laboratory that, consistent with the International Standard for Laboratories and related Technical Documents, identifies in a *Sample* the presence of a *Prohibited Substance* or its *Metabolites* or *Markers* (including elevated quantities of endogenous substances) or evidence of the *Use* of a *Prohibited Method*.

Adverse Passport Finding: A report identified as an *Adverse Passport Finding* as described in the applicable *International Standards*.

Anti-Doping Organization: A *Signatory* that is responsible for adopting rules for initiating, implementing or enforcing any part of the *Doping Control* process. This includes, for example, the International Olympic Committee, the International Paralympic Committee, other *Major Event Organizations* that conduct *Testing* at their *Events*, *WADA*, International Federations, and *National Anti-Doping Organizations.*

Athlete: Any *Person* who competes in sport at the international level (as defined by each International Federation), or the national level (as defined by each *National Anti-Doping Organization*). An *Anti-Doping Organization* has discretion to apply anti-doping rules to an *Athlete* who is neither an *International-Level Athlete* nor a *National-Level Athlete*, and thus to bring them within the definition of "Athlete." In relation to *Athletes* who are neither *International-Level* nor *National-Level Athletes*, an *Anti-Doping Organization* may elect to: conduct limited *Testing* or no *Testing* at all; analyze *Samples* for less than the full menu of *Prohibited Substances*; require limited or no whereabouts information; or not require advance *TUEs*. However, if an Article 2.1, 2.3 or 2.5 anti-doping rule violation is committed by any *Athlete* over whom an *Anti-Doping Organization* has authority who competes below the international or national level, then the *Consequences* set forth in the *Code* (except Article 14.3.2) must be applied. For purposes of Article 2.8 and Article 2.9 and for purposes of anti-doping information and education, any *Person* who participates in sport under the authority of any *Signatory*, government, or other sports organization accepting the *Code* is an *Athlete*.

Athlete Biological Passport: The program and methods of gathering and collating data as described in the International Standard for Testing and Investigations and International

Copyright: ISSF

Standard for Laboratories.

Athlete Support Personnel: Any coach, trainer, manager, agent, team staff, official, medical, paramedical personnel, parent or any other *Person* working with, treating or assisting an *Athlete* participating in or preparing for sports *Competition*.

Attempt: Purposely engaging in conduct that constitutes a substantial step in a course of conduct planned to culminate in the commission of an anti-doping rule violation. Provided, however, there shall be no anti-doping rule violation based solely on an *Attempt* to commit a violation if the *Person* renounces the *Attempt* prior to it being discovered by a third party not involved in the *Attempt*.

Atypical Finding: A report from a *WADA*-accredited laboratory or other *WADA*-approved laboratory which requires further investigation as provided by the International Standard for Laboratories or related Technical Documents prior to the determination of an *Adverse Analytical Finding*.

Atypical Passport Finding: A report described as an *Atypical Passport Finding* as described in the applicable *International Standards*.

CAS: The Court of Arbitration for Sport.

Code: The World Anti-Doping Code.

Competition: A single race, match, game or singular sport contest. For example, a basketball game or the finals of the Olympic 100-meter race in athletics. For stage races and other sport contests where prizes are awarded on a daily or other interim basis the distinction between a *Competition* and an *Event* will be as provided in the rules of the applicable International Federation. In shooting sport, for example, 50m Rifle Prone Men, 50m Rifle 3 Positions Women, Skeet Men, 25m Pistol Women and team events are all *Competitions* within any ISSF World Cup *Event*.

Nota bene: *For the purpose of all shooting sport regulatory documents* ***other than these Anti-Doping Rules****, the word "Competition" still means a sporting event conducted together under one ruling body. For example the Olympic Games, ISSF World Championships, or Pan American Games, or World Cup, or Continental Championships.*

Consequences of Anti-Doping Rule Violations ("Consequences"): An *Athlete's* or other *Person's* violation of an anti-doping rule may result in one or more of the following: (a) ***Disqualification*** means the *Athlete's* results in a particular *Competition* or *Event* are invalidated, with all resulting *Consequences* including forfeiture of any medals, points and prizes; (b) ***Ineligibility*** means the *Athlete* or other *Person* is barred on account of an anti-doping rule violation for a specified period of time from participating in any *Competition* or other activity or funding as provided in Article 10.12.1; (c) ***Provisional Suspension*** means the *Athlete* or other *Person* is barred temporarily from participating in any *Competition* or activity prior to the final decision at a hearing conducted under Article 8; (d) ***Financial Consequences*** means a financial sanction imposed for an anti-doping rule violation or to recover costs associated with an anti-doping rule violation; and (e) ***Public Disclosure or Public Reporting*** means the

EDITION 2017 | Second Print 01/2018
Copyright: ISSF

dissemination or distribution of information to the general public or *Persons* beyond those *Persons* entitled to earlier notification in accordance with Article 14. Teams in *Team Sports* may also be subject to *Consequences* as provided in Article 11 of the *Code*.

Contaminated Product: A product that contains a *Prohibited Substance* that is not disclosed on the product label or in information available in a reasonable Internet search.

Disqualification: See *Consequences of Anti-Doping Rule Violations* above.

Doping Control: All steps and processes from test distribution planning through to ultimate disposition of any appeal including all steps and processes in between such as provision of whereabouts information, *Sample* collection and handling, laboratory analysis, *TUEs*, results management and hearings.

Event: A series of individual Competitions conducted together under one ruling body. e.g., the Olympic Games, FINA World Championships, Pan American Games, or a Shooting World Cup.

Nota bene: *For the purpose of all shooting sport regulatory documents* ***other than these Anti-Doping Rules****, the word "Event" still means a completed match with or without Final or Shoot-off as may be further defined in those documents.*

Event Venues: Those venues so designated by the ruling body for the *Event*.

Event Period: The time between the beginning of the first *Competition* of an *Event* and the end of the last *Competition* of an *Event*, as established by the ruling body of the *Event*.

Fault: *Fault* is any breach of duty or any lack of care appropriate to a particular situation. Factors to be taken into consideration in assessing an *Athlete* or other *Person*'s degree of *Fault* include, for example, the *Athlete*'s or other *Person*'s experience, whether the *Athlete* or other *Person* is a *Minor*, special considerations such as impairment, the degree of risk that should have been perceived by the *Athlete* and the level of care and investigation exercised by the *Athlete* in relation to what should have been the perceived level of risk. In assessing the *Athlete's* or other *Person's* degree of *Fault*, the circumstances considered must be specific and relevant to explain the *Athlete's* or other *Person's* departure from the expected standard of behavior. Thus, for example, the fact that an *Athlete* would lose the opportunity to earn large sums of money during a period of *Ineligibility,* or the fact that the *Athlete* only has a short time left in his or her career, or the timing of the sporting calendar, would not be relevant factors to be considered in reducing the period of *Ineligibility* under Article 10.5.1 or 10.5.2.

Financial Consequences: see *Consequences of Anti-Doping Rule Violations*, above.

In-Competition: "*In-Competition*" means the period commencing twelve hours before a *Competition* in which the *Athlete* is scheduled to participate through the end of such *Competition* and the *Sample* collection process related to such *Competition*.

Independent Observer Program: A team of observers, under the supervision of *WADA*, who observe and provide guidance on the *Doping Control* process at certain *Events* and report on their observations.

Copyright: ISSF

Individual Sport: Any sport that is not a *Team Sport.*

Ineligibility: See *Consequences of Anti-Doping Rule Violations* above.

International Event: An *Event* or *Competition* where the International Olympic Committee, the International Paralympic Committee, an International Federation, a *Major Event Organization,* or another international sport organization is the ruling body for the *Event* or appoints the technical officials for the *Event.* In shooting sport this includes any ISSF supervised *Event*.

International-Level Athlete: *Athletes* who compete in sport at the international level, as defined by each International Federation, consistent with the International Standard for Testing and Investigations. For the shooting sport *International-Level Athletes* are defined as set out in the Scope section of the Introduction to these Anti-Doping Rules.

International Standard: A standard adopted by *WADA* in support of the *Code*. Compliance with an *International Standard* (as opposed to another alternative standard, practice or procedure) shall be sufficient to conclude that the procedures addressed by the *International Standard* were performed properly. *Internationa*l *Standards* shall include any Technical Documents issued pursuant to the *International Standard*.

Major Event Organizations: The continental associations of *National Olympic Committee*s and other international multi-sport organizations that function as the ruling body for any continental, regional or other *International Event*.

Marker: A compound, group of compounds or biological variable(s) that indicates the *Use* of a *Prohibited Substance* or *Prohibited Method.*

Metabolite: Any substance produced by a biotransformation process.

Minor: A natural *Person* who has not reached the age of eighteen years.

National Anti-Doping Organization: The entity(ies) designated by each country as possessing the primary authority and responsibility to adopt and implement anti-doping rules, direct the collection of *Samples*, the management of test results, and the conduct of hearings at the national level. If this designation has not been made by the competent public authority(ies), the entity shall be the country's *National Olympic Committee* or its designee.

National Event: A sport *Event* or *Competition* involving *International-* or *National-Level Athletes* that is not an *International Event*.

National Federation: A national or regional entity which is a member of or is recognized by the ISSF as being its Member Federation, or the national entity governing the ISSF's sport, in that nation or region.

National-Level Athlete: *Athletes* who compete in sport at the national level, as defined by each *National Anti-Doping Organization,* consistent with the International Standard for Testing and Investigations.

EDITION 2017 | Second Print 01/2018
Copyright: ISSF

National Olympic Committee: The organization recognized by the International Olympic Committee. The term *National Olympic Committee* shall also include the National Sport Confederation in those countries where the National Sport Confederation assumes typical *National Olympic Committee* responsibilities in the anti-doping area.

No Fault or Negligence: The *Athlete* or other *Person's* establishing that he or she did not know or suspect, and could not reasonably have known or suspected even with the exercise of utmost caution, that he or she had Used or been administered the Prohibited Substance or Prohibited Method or otherwise violated an anti-doping rule. Except in the case of a Minor, for any violation of Article 2.1, the Athlete must also establish how the Prohibited Substance entered his or her system.

No Significant Fault or Negligence: The *Athlete* or other *Person's* establishing that his or her *Fault* or negligence, when viewed in the totality of the circumstances and taking into account the criteria for *No Fault* or negligence, was not significant in relationship to the anti-doping rule violation. Except in the case of a *Minor*, for any violation of Article 2.1, the *Athlete* must also establish how the *Prohibited Substance* entered his or her system.

Out-of-Competition: Any period which is not *In-Competition*.

Participant: Any *Athlete* or *Athlete Support Person*.

Person: A natural *Person* or an organization or other entity.

Possession: The actual, physical *Possession*, or the constructive *Possession* (which shall be found only if the *Person* has exclusive control or intends to exercise control over the *Prohibited Substance* or *Prohibited Method* or the premises in which a *Prohibited Substance* or *Prohibited Method* exists); provided, however, that if the *Person* does not have exclusive control over the *Prohibited Substance* or *Prohibited Method* or the premises in which a *Prohibited Substance* or *Prohibited Method* exists, constructive *Possession* shall only be found if the *Person* knew about the presence of the *Prohibited Substance* or *Prohibited Method* and intended to exercise control over it. Provided, however, there shall be no anti-doping rule violation based solely on *Possession* if, prior to receiving notification of any kind that the *Person* has committed an anti-doping rule violation, the *Person* has taken concrete action demonstrating that the *Person* never intended to have *Possession* and has renounced *Possession* by explicitly declaring it to an *Anti-Doping Organization*. Notwithstanding anything to the contrary in this definition, the purchase (including by any electronic or other means) of a *Prohibited Substance* or *Prohibited Method* constitutes *Possession* by the *Person* who makes the purchase.

Prohibited List: The List identifying the *Prohibited Substances* and *Prohibited Methods*.

Prohibited Method: Any method so described on the *Prohibited List*.

Prohibited Substance: Any substance, or class of substances, so described on the *Prohibited List*.

Copyright: ISSF

Provisional Hearing: For purposes of Article 7.9, an expedited abbreviated hearing occurring prior to a hearing under Article 8 that provides the *Athlete* with notice and an opportunity to be heard in either written or oral form.

Provisional Suspension: See *Consequences of Anti-Doping Rule Violations* above.

Publicly Disclose or Publicly Report: See *Consequences of Anti-Doping Rule Violations* above.

Regional Anti-Doping Organization: A regional entity designated by member countries to coordinate and manage delegated areas of their national anti-doping programs, which may include the adoption and implementation of anti-doping rules, the planning and collection of *Samples*, the management of results, the review of *TUEs*, the conduct of hearings, and the conduct of educational programs at a regional level.

Registered Testing Pool: The pool of highest-priority *Athletes* established separately at the international level by International Federations and at the national level by *National Anti-Doping Organizations,* who are subject to focused *In-Competition* and *Out-of-Competition Testing* as part of that International Federation's or *National Anti-Doping Organization*'s test distribution plan and therefore are required to provide whereabouts information as provided in Article 5.6 of the *Code* and the International Standard for Testing and Investigations.

Sample or Specimen: Any biological material collected for the purposes of *Doping Control*.

Signatories: Those entities signing the *Code* and agreeing to comply with the *Code*, as provided in Article 23 of the *Code*.

Specified Substance: See Article 4.2.2.

Strict Liability: The rule which provides that under Article 2.1 and Article 2.2, it is not necessary that intent, *Fault*, negligence, or knowing *Use* on the *Athlete's* part be demonstrated by the *Anti-Doping Organization* in order to establish an anti-doping rule violation.

Substantial Assistance: For purposes of Article 10.6.1, a *Person* providing *Substantial Assistance* must: (1) fully disclose in a signed written statement all information he or she possesses in relation to anti-doping rule violations, and (2) fully cooperate with the investigation and adjudication of any case related to that information, including, for example, presenting testimony at a hearing if requested to do so by an *Anti-Doping Organization* or hearing panel. Further, the information provided must be credible and must comprise an important part of any case which is initiated or, if no case is initiated, must have provided a sufficient basis on which a case could have been brought.

Tampering: Altering for an improper purpose or in an improper way; bringing improper influence to bear; interfering improperly; obstructing, misleading or engaging in any fraudulent conduct to alter results or prevent normal procedures from occurring.

Target Testing: Selection of specific *Athletes* for *Testing* based on criteria set forth in the International Standard for Testing and Investigations.

EDITION 2017 | Second Print 01/2018
Copyright: ISSF

Team Sport: A sport in which the substitution of players is permitted during a *Competition*.

Testing: The parts of the *Doping Control* process involving test distribution planning, *Sample* collection, *Sample* handling, and *Sample* transport to the laboratory.

Trafficking: Selling, giving, transporting, sending, delivering or distributing (or *Possessing* for any such purpose) a *Prohibited Substance* or *Prohibited Method* (either physically or by any electronic or other means) by an *Athlete*, *Athlete Support Person* or any other *Person* subject to the jurisdiction of an *Anti-Doping Organization* to any third party; provided, however, this definition shall not include the actions of "bona fide" medical personnel involving a *Prohibited Substance* used for genuine and legal therapeutic purposes or other acceptable justification, and shall not include actions involving *Prohibited Substances* which are not prohibited in *Out-of-Competition Testing* unless the circumstances as a whole demonstrate such *Prohibited Substances* are not intended for genuine and legal therapeutic purposes or are intended to enhance sport performance.

TUE: Therapeutic Use Exemption, as described in Article 4.4.

UNESCO Convention: The International Convention against Doping in Sport adopted by the 33rd session of the UNESCO General Conference on 19 October, 2005 including any and all amendments adopted by the States Parties to the Convention and the Conference of Parties to the International Convention against Doping in Sport.

Use: The utilization, application, ingestion, injection or consumption by any means whatsoever of any *Prohibited Substance* or *Prohibited Method*.

WADA: The World Anti-Doping Agency.

Copyright: ISSF

APPENDIX 2. EXAMPLES OF THE APPLICATION OF ARTICLE 10

EXAMPLE 1

Facts: An Adverse Analytical Finding results from the presence of an anabolic steroid in an In-Competition test (Article 2.1); the Athlete promptly admits the anti-doping rule violation; the Athlete establishes No Significant Fault or Negligence; and the Athlete provides Substantial Assistance.

Application of Consequences:

1) The starting point would be Article 10.2. Because the Athlete is deemed to have No Significant Fault that would be sufficient corroborating evidence (Articles 10.2.1.1 and 10.2.3) that the anti-doping rule violation was not intentional, the period of Ineligibility would thus be two years, not four years (Article 10.2.2).

2) In a second step, the panel would analyze whether the Fault-related reductions (Articles 10.4 and 10.5) apply. Based on No Significant Fault or Negligence (Article 10.5.2) since the anabolic steroid is not a Specified Substance, the applicable range of sanctions would be reduced to a range of two years to one year (minimum one-half of the two year sanction). The panel would then determine the applicable period of Ineligibility within this range based on the Athlete's degree of Fault. (Assume for purposes of illustration in this example that the panel would otherwise impose a period of Ineligibility of 16 months.)

3) In a third step, the panel would assess the possibility for suspension or reduction under Article 10.6 (reductions not related to Fault). In this case, only Article 10.6.1 (Substantial Assistance) applies. (Article 10.6.3, Prompt Admission, is not applicable because the period of Ineligibility is already below the two-year minimum set forth in Article 10.6.3.) Based on Substantial Assistance, the period of Ineligibility could be suspended by three-quarters of 16 months.* The minimum period of Ineligibility would thus be four months. (Assume for purposes of illustration in this example that the panel suspends ten months and the period of Ineligibility would thus be six months.)

4) Under Article 10.11, the period of Ineligibility, in principle, starts on the date of the final hearing decision. However, because the Athlete promptly admitted the anti-doping rule violation, the period of Ineligibility could start as early as the date of Sample collection, but in any event the Athlete would have to serve at least one-half of the Ineligibility period (i.e., three months) after the date of the hearing decision (Article 10.11.2).

EDITION 2017 | Second Print 01/2018
Copyright: ISSF

5) Since the Adverse Analytical Finding was committed in a Competition, the panel would have to automatically Disqualify the result obtained in that Competition (Article 9).

6) According to Article 10.8, all results obtained by the Athlete subsequent to the date of the Sample collection until the start of the period of Ineligibility would also be Disqualified unless fairness requires otherwise.

7) The information referred to in Article 14.3.2 must be Publicly Disclosed, unless the Athlete is a Minor, since this is a mandatory part of each sanction (Article 10.13).

8) The Athlete is not allowed to participate in any capacity in a Competition or other sport-related activity under the authority of any Signatory or its affiliates during the Athlete's period of Ineligibility (Article 10.12.1). However, the Athlete may return to train with a team or to use the facilities of a club or other member organization of a Signatory or its affiliates during the shorter of: (a) the last two months of the Athlete's period of Ineligibility, or (b) the last one-quarter of the period of Ineligibility imposed (Article 10.12.2). Thus, the Athlete would be allowed to return to training one and one-half months before the end of the period of Ineligibility.

EXAMPLE 2

Facts: An Adverse Analytical Finding results from the presence of a stimulant which is a Specified Substance in an In-Competition test (Article 2.1); the Anti-Doping Organization is able to establish that the Athlete committed the anti-doping rule violation intentionally; the Athlete is not able to establish that the Prohibited Substance was Used Out-of-Competition in a context unrelated to sport performance; the Athlete does not promptly admit the anti-doping rule violation as alleged; the Athlete does provide Substantial Assistance.

Application of Consequences:

1) The starting point would be Article 10.2. Because the Anti-Doping Organization can establish that the anti-doping rule violation was committed intentionally and the Athlete is unable to establish that the substance was permitted Out-of-Competition and the Use was unrelated to the Athlete's sport performance (Article 10.2.3), the period of Ineligibility would be four years (Article 10.2.1.2).

2) Because the violation was intentional, there is no room for a reduction based on Fault (no application of Articles 10.4 and 10.5). Based on Substantial Assistance, the sanction could be suspended by up to three-quarters of the four years.* The minimum period of Ineligibility would thus be one year.

3) Under Article 10.11, the period of Ineligibility would start on the date of the final hearing decision.

Copyright: ISSF

4) Since the Adverse Analytical Finding was committed in a Competition, the panel would automatically Disqualify the result obtained in the Competition.

5) 5. According to Article 10.8, all results obtained by the Athlete subsequent to the date of Sample collection until the start of the period of Ineligibility would also be Disqualified unless fairness requires otherwise.

6) The information referred to in Article 14.3.2 must be Publicly Disclosed, unless the Athlete is a Minor, since this is a mandatory part of each sanction (Article 10.13).

7) The Athlete is not allowed to participate in any capacity in a Competition or other sport-related activity under the authority of any Signatory or its affiliates during the Athlete's period of Ineligibility (Article 10.12.1). However, the Athlete may return to train with a team or to use the facilities of a club or other member organization of a Signatory or its affiliates during the shorter of: (a) the last two months of the Athlete's period of Ineligibility, or (b) the last one-quarter of the period of Ineligibility imposed (Article 10.12.2). Thus, the Athlete would be allowed to return to training two months before the end of the period of Ineligibility.

EXAMPLE 3

Facts: An Adverse Analytical Finding results from the presence of an anabolic steroid in an Out-of-Competition test (Article 2.1); the Athlete establishes No Significant Fault or Negligence; the Athlete also establishes that the Adverse Analytical Finding was caused by a Contaminated Product.

Application of Consequences:

1) The starting point would be Article 10.2. Because the Athlete can establish through corroborating evidence that he did not commit the anti-doping rule violation intentionally, i.e., he had No Significant Fault in Using a Contaminated Product (Articles 10.2.1.1 and 10.2.3), the period of Ineligibility would be two years (Articles 10.2.2).

2) In a second step, the panel would analyze the Fault-related possibilities for reductions (Articles 10.4 and 10.5). Since the Athlete can establish that the anti-doping rule violation was caused by a Contaminated Product and that he acted with No Significant Fault or Negligence based on Article 10.5.1.2, the applicable range for the period of Ineligibility would be reduced to a range of two years to a reprimand. The panel would determine the period of Ineligibility within this range, based on the Athlete's degree of Fault. (Assume for purposes of illustration in this example that the panel would otherwise impose a period of Ineligibility of four months.)

EDITION 2017 | Second Print 01/2018
Copyright: ISSF

3) According to Article 10.8, all results obtained by the Athlete subsequent to the date of Sample collection until the start of the period of Ineligibility would be Disqualified unless fairness requires otherwise.

4) The information referred to in Article 14.3.2 must be Publicly Disclosed, unless the Athlete is a Minor, since this is a mandatory part of each sanction (Article 10.13).

5) The Athlete is not allowed to participate in any capacity in a Competition or other sport-related activity under the authority of any Signatory or its affiliates during the Athlete's period of Ineligibility (Article 10.12.1). However, the Athlete may return to train with a team or to use the facilities of a club or other member organization of a Signatory or its affiliates during the shorter of: (a) the last two months of the Athlete's period of Ineligibility, or (b) the last one-quarter of the period of Ineligibility imposed (Article 10.12.2). Thus, the Athlete would be allowed to return to training one month before the end of the period of Ineligibility.

EXAMPLE 4

Facts: An Athlete who has never had an Adverse Analytical Finding or been confronted with an anti-doping rule violation spontaneously admits that she Used an anabolic steroid to enhance her performance. The Athlete also provides Substantial Assistance.

Application of Consequences:

1) Since the violation was intentional, Article 10.2.1 would be applicable and the basic period of Ineligibility imposed would be four years.

2) There is no room for Fault-related reductions of the period of Ineligibility (no application of Articles 10.4 and 10.5).

3) Based on the Athlete's spontaneous admission (Article 10.6.2) alone, the period of Ineligibility could be reduced by up to one-half of the four years. Based on the Athlete's Substantial Assistance (Article 10.6.1) alone, the period of Ineligibility could be suspended up to three-quarters of the four years.* Under Article 10.6.4, in considering the spontaneous admission and Substantial Assistance together, the most the sanction could be reduced or suspended would be up to three-quarters of the four years. The minimum period of Ineligibility would be one year.

Copyright: ISSF

4) The period of Ineligibility, in principle, starts on the day of the final hearing decision (Article 10.11). If the spontaneous admission is factored into the reduction of the period of Ineligibility, an early start of the period of Ineligibility under Article 10.11.2 would not be permitted. The provision seeks to prevent an Athlete from benefitting twice from the same set of circumstances. However, if the period of Ineligibility was suspended solely on the basis of Substantial Assistance, Article 10.11.2 may still be applied, and the period of Ineligibility started as early as the Athlete's last Use of the anabolic steroid.

5) According to Article 10.8, all results obtained by the Athlete subsequent to the date of the anti-doping rule violation until the start of the period of Ineligibility would be Disqualified unless fairness requires otherwise.

6) The information referred to in Article 14.3.2 must be Publicly Disclosed, unless the Athlete is a Minor, since this is a mandatory part of each sanction (Article 10.13).

7) The Athlete is not allowed to participate in any capacity in a Competition or other sport-related activity under the authority of any Signatory or its affiliates during the Athlete's period of Ineligibility (Article 10.12.1). However, the Athlete may return to train with a team or to use the facilities of a club or other member organization of a Signatory or its affiliates during the shorter of: (a) the last two months of the Athlete's period of Ineligibility, or (b) the last one-quarter of the period of Ineligibility imposed (Article 10.12.2). Thus, the Athlete would be allowed to return to training two months before the end of the period of Ineligibility.

EXAMPLE 5

Facts:

An Athlete Support Person helps to circumvent a period of Ineligibility imposed on an Athlete by entering him into a Competition under a false name. The Athlete Support Person comes forward with this anti-doping rule violation (Article 2.9) spontaneously before being notified of an anti-doping rule violation by an Anti-Doping Organization.

Application of Consequences:

1) According to Article 10.3.4, the period of Ineligibility would be from two up to four years, depending on the seriousness of the violation. (Assume for purposes of illustration in this example that the panel would otherwise impose a period of Ineligibility of three years.)

2) There is no room for Fault-related reductions since intent is an element of the anti-doping rule violation in Article 2.9 (see comment to Article 10.5.2).

EDITION 2017 | Second Print 01/2018
Copyright: ISSF

3) According to Article 10.6.2, provided that the admission is the only reliable evidence, the period of Ineligibility may be reduced down to one-half. (Assume for purposes of illustration in this example that the panel would impose a period of Ineligibility of 18 months.)

4) The information referred to in Article 14.3.2 must be Publicly Disclosed unless the Athlete Support Person is a Minor, since this is a mandatory part of each sanction (Article 10.13).

EXAMPLE 6

Facts: An Athlete was sanctioned for a first anti-doping rule violation with a period of Ineligibility of 14 months, of which four months were suspended because of Substantial Assistance. Now, the Athlete commits a second anti-doping rule violation resulting from the presence of a stimulant which is not a Specified Substance in an In-Competition test (Article 2.1); the Athlete establishes No Significant Fault or Negligence; and the Athlete provided Substantial Assistance. If this were a first violation, the panel would sanction the Athlete with a period of Ineligibility of 16 months and suspend six months for Substantial Assistance.

Application of Consequences:

1) Article 10.7 is applicable to the second anti-doping rule violation because Article 10.7.4.1 and Article 10.7.5 apply.

2) Under Article 10.7.1, the period of Ineligibility would be the greater of:

a) six months;

b) one-half of the period of Ineligibility imposed for the first anti-doping ruleviolation without taking into account any reduction under Article 10.6 (inthis example, that would equal one-half of 14 months, which is sevenmonths); or

c) twice the period of Ineligibility otherwise applicable to the second anti-doping rule violation treated as if it were a first violation, without takinginto account any reduction under Article 10.6 (in this example, thatwould equaltwo times 16 months, which is 32 months).

Thus, the period of Ineligibility for the second violation would be the greater of(a), (b) and (c), which is a period of Ineligibility of 32 months.

Copyright: ISSF

3) In a next step, the panel would assess the possibility for suspension or reduction under Article 10.6 (non-Fault-related reductions). In the case of the second violation, only Article 10.6.1 (Substantial Assistance) applies. Based on Substantial Assistance, the period of Ineligibility could be suspended by three-quarters of 32 months.* The minimum period of Ineligibility would thus be eight months. (Assume for purposes of illustration in this example that the panel suspends eight months of the period of Ineligibility for Substantial Assistance, thus reducing the period of Ineligibility imposed to two years.)

4) Since the Adverse Analytical Finding was committed in a Competition, the panel would automatically Disqualify the result obtained in the Competition.

5) According to Article 10.8, all results obtained by the Athlete subsequent to the date of Sample collection until the start of the period of Ineligibility would also be Disqualified unless fairness requires otherwise.

6) The information referred to in Article 14.3.2 must be Publicly Disclosed, unless the Athlete is a Minor, since this is a mandatory part of each sanction (Article 10.13).

7) The Athlete is not allowed to participate in any capacity in a Competition or other sport-related activity under the authority of any Signatory or its affiliates during the Athlete's period of Ineligibility (Article 10.12.1). However, the Athlete may return to train with a team or to use the facilities of a club or other member.

EDITION 2017 | Second Print 01/2018
Copyright: ISSF

Copyright: ISSF

Precise. Flexible. Unique.

MEYTON ELEKTRONIK

Black Magic

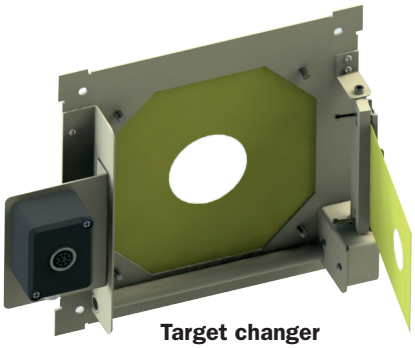

Target changer

Precise and flexible!

- highest measurement accuracy with crossover light barriers
- new controller makes direct networking possible (ethernet/wireless connection)
- Target changer or red-green light controller connectivity for multi-shot air pistol and ISSF backing target band

Display and control desk

Software LANA

Easiest operation!

Top-quality industry standard PC incl. display and robust casing placed at each shooting lane

Remote control - many functions, easy-to-use

NEW: Innovative software, e. g. LANA - easy as pie lane allocation and setting up of competitons

Black Magic XL

World's first!

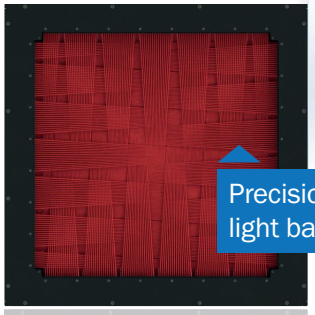

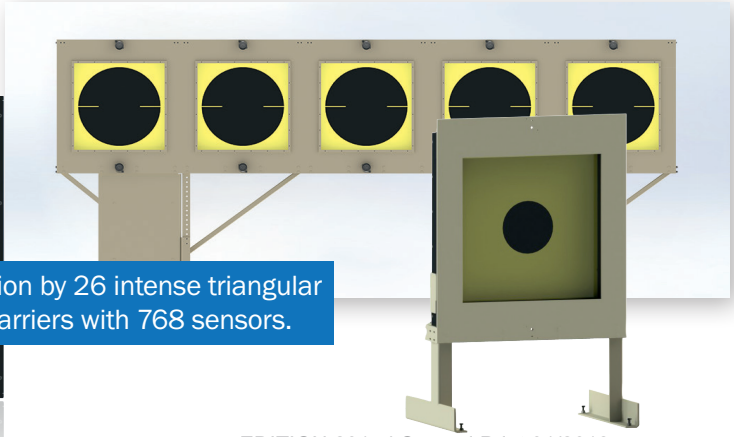

Precision by 26 intense triangular light barriers with 768 sensors.

Unique!

- 100% optical measurement system - all shots are accurately captured uncompromisingly by a flawless curtain of light barriers within the measuring field
- A width of just 73cm and an measurement area of 55 x 55 cm - perfectly suitable for all pistole and rifle disciplines from 25 to 100 m.

EDITION 2017 | Second Print 01/2018

MEYTON Elektronik GmbH ◈ Tel. +49 (5226) 98240 ◈ info@meyton.de ◈ www.meyton.de

Made In Germany

ISSF

GET ALL YOU WANT TO KNOW ABOUT YOUR FAVORITE SPORT.

WEBSITE

FACEBOOK/TWITTER

YOUTUBE

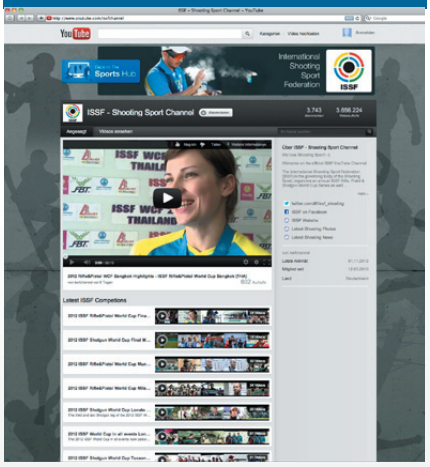

MAGAZINE

TELEVISION & DVD

NEWSLETTER

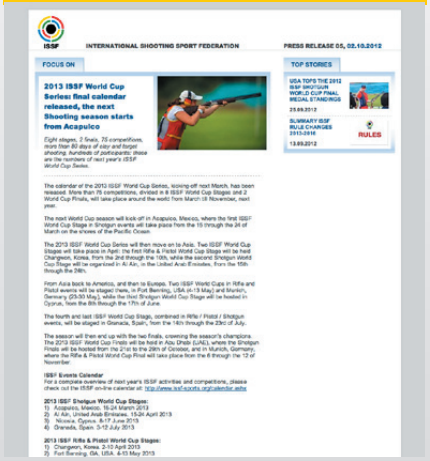

WWW.ISSF-SPORTS.ORG

International Shooting Sport Federation
Internationaler Schiess-Sportverband e.V.
Fédération Internationale de Tir Sportif
Federación Internacional de Tiro Deportivo

6. GENERAL TECHNICAL RULES

EDITION 2017 | Second Print 01/2018
Copyright: ISSF

Chapters

6.1 GENERAL *216*

6.2 SAFETY *218*

6.3 TARGETS AND TARGET STANDARDS *222*

6.4 RANGES AND OTHER FACILITIES *237*

6.5 GAUGES AND INSTRUMENTS *266*

6.6 CHAMPIONSHIP ADMINISTRATION *268*

6.7 COMPETITION CLOTHING AND EQUIPMENT *273*

6.8 COMPETITION JURY DUTIES AND FUNCTIONS *278*

6.9 ORGANIZING COMMITTEE COMPETITION OFFICIALS *280*

6.10 EST COMPETITION OPERATIONS *281*

6.11 COMPETITION PROCEDURES (see also 6.17, Finals Competition Procedures) *289*

6.12 RULES OF CONDUCT FOR ATHLETES AND OFFICIALS *295*

6.13 MALFUNCTIONS *298*

6.14 SCORING AND RESULTS PROCEDURES *299*

6.15 TIE-BREAKING *303*

6.16 PROTESTS AND APPEALS *303*

6.17 FINALS IN OLYMPIC RIFLE AND PISTOL EVENTS *306*

6.18 AIR RIFLE AND AIR PISTOL MIXED TEAM EVENTS *326*

6.19 FORMS *333*

RULE NUMBERING

All ISSF Rules are numbered according to a rule numbering protocol that limits rule numbers to four (4) levels (i.e. 6.10.3.5). If a fifth level is used, those rules are designated with the letters a), b), c), etc.

Copyright: ISSF

6.20 THE ISSF DRESS CODE *342*

6.21 INDEX *346*

1 PAPER TARGETS AND SCORING GAUGES *359*

2 RANGE AND FIRING POINT EQUIPMENT *364*

3 COMPETITION OFFICIALS DUTIES *367*

4 COMPETITION PROCEDURES *369*

5 SCORING PROCEDURES *371*

6 300m SCORING AND MARKING PROCEDURES *375*

EDITION 2017 | Second Print 01/2018
Copyright: ISSF

Definitions and Abbreviations

The following are definitions of special terms and abbreviations that are used in the ISSF General Technical Rules and the ISSF Rifle, Pistol, Shotgun and Running Target Rules.

Term	Definition
Athletes	Competitors or participants in a sports competition. Athletes in the sport of shooting are sometimes called shooters.
Bib Number/Start Number	Every athlete entered in Championships is issued a unique Bib or Start Number. These numbers are used to identify and track competitors and must be worn on the athletes' backs during training and competition.
Championship	A single organized shooting competition with a program of events. A Championship (capital C) is a competition that is authorized and supervised by ISSF rules, Technical Delegates, Juries and anti-doping controls.
Classification	An obsolete term used in previous ISSF Rulebooks to categorize "scoring, timing and results." See "RTS."
Competition	A general reference to a sports contest that may include a series of events (Championship) or may be a contest within a single event.
Course of Fire	A description of the stages of competition within an event that specifies the number of shots in each series and stage, the type of firing and the time limits.
CRO	Chief Range Officer
Discipline	A sub-group of events within a sport that have common characteristics. Shooting has four (4) disciplines: 1) Rifle, 2) Pistol, 3) Shotgun and 4) Running Target.
EST	Electronic scoring target(s)
Event	A unique shooting contest with a specific course of fire and rules of conduct. The ISSF also recognizes many additional events for individual and team competitions for open and junior age groups.
Final	The Final is the last stage of an Olympic competition event. In a Final, the best six or eight athletes in the Qualification have a new (start-from-zero) competition to decide their final ranking.
FOP	Field of Play. In shooting, the FOP includes the area behind the firing line where access is restricted to competing athletes and on duty officials, the firing line or shooting stations and the downrange area that includes the targets and backstops or safety zone.
MATCH Shots	Scoring or record shots that count in an athlete's score.
Medal Match	10m Running Target 60 and 40-shot events are concluded with Medal Match duels that decide the final rankings of the top four athletes.
Min.	Minute, minutes
Olympic Event	A Shooting event accepted by the International Olympic Committee for inclusion in the Olympic program. Shooting has 15 Olympic events. Each Olympic event has a Qualification and a Final.
PET	Pre-Event Training

Copyright: ISSF

Term	Definition
RTS	Results, Timing and Scoring. The RTS process is a part of competition operations that involves the preparation of start lists, target scoring, resolving scoring issues and the preparation and distribution of results lists.
Round	A phase of competition within a shooting event. Shooting events may have Elimination Rounds, Qualification Rounds and Finals. In Shotgun events, a "round" may also refer to a series of 25 targets/doubles.
Sec.	Second, seconds
Series	A sequence of shots fired within a stage or course of fire. Most shooting events have 10-shot series; 25m Pistol events have 5-shot series; Shotgun events have 25 or 30 target series. Series in Shotgun events are often called rounds.
Sighting Shots	Practice or warm-up shots that are fired in a shooting event prior to MATCH shots.
Sport	A distinct grouping of competitive events with common elements and a single governing body. Shooting (capital S) is a "sport" where athletes in different events fire guns at targets that rank competing athletes according to their scores. The IOC recognizes shooting as one of 28 Summer Olympic sports.
Sport Presentation	Visual, audio and information enhancements such as announcements, music, color and educational media that are used in the conduct of Shooting events to make them more interesting and informative for spectator and TV audiences.
Squadding	The assignment of athletes entered in an event to relays and firing points in Rifle-Pistol events or the assignment of athletes to specific squads in Shotgun events. This process produces Start Lists.
Stage	A phase or part of an event course of fire. A 3-Position Rifle event has three stages, one for each position. The 25m Pistol Women event has two stages, precision and rapid fire.
Start List	Official documents produced in competitions that list all competitors entered in an event according to an athlete's relay and firing point or squad and position in the squad.
Start Time	The Start Time in each shooting event is the time when commands for the first MATCH shot begin.
Team Events	The ISSF recognizes team events that are included in World Championship programs. These team events establish rankings based on the total scores fired by three athletes entered in an individual event.

EDITION 2017 | Second Print 01/2018
Copyright: ISSF

ISSF RECOGNIZED SHOOTING EVENTS

These tables list ISSF-recognized Shooting events and their status as approved by the International Olympic Committee and/or the ISSF General Assembly (1.6.7.7) together with basic technical details regarding their competition formats and numbers of shots in each competition stage as approved by the ISSF Administrative Council (1.7.2.5).

- In ISSF Championships, events for Men, Men Junior, Women and Women Junior may have individual competition only or individual and team (3 persons) competitions as stated in these Regulations and the Competition Program (3.7).
- Status indicates the recognition status for each event:
    - M = the event is recognized as a men's event.
    - W = the event is recognized as a women's event.
    - MJ = the event is recognized as a men junior event.
    - WJ = the event is recognized as a women junior event.
    - Olympic = the event is recognized by the IOC for inclusion in the Olympic Program.
    - WCH = the event is a mandatory World Championship event.
    - WCHS = the event is a separable World Championship event that can be organized in a separate WCH if it cannot be included in a regular WCH (see 3.3.3.4).
    - Olympic events have a Qualification and Final. Non-Olympic events have only a "full program" with no Finals.
    - Technical Rules for all ISSF events are found in the General Technical Rules 6.0 and in the Rifle, Pistol, Shotgun and Running Target Rules (7.0, 8.0, 9.0, 10.0)
    - Technical Rules for Rifle and Pistol Finals are found in 6.17; Rules for Shotgun Finals are found in 9.18; Rules for Running Target Medal Matches are found in 10.8.
    - Technical Rules for the Mixed Team events are found in 6.18 and 9.19.

Copyright: ISSF

EVENTS FOR MEN AND MEN JUNIOR				
Event Name	**Abbrev.**	**Status**	**Qualification or Full Program**	**Final**
10m Air Rifle (standing)	AR60	M, MJ, Olympic, WCH	60 Shots	24 shots max.
50m Rifle 3-Positions (kneeling, prone, standing)	FR3X40	M, MJ, Olympic, WCH	3 x 40 shots	3 x 15 shots max.
50m Rifle Prone	FR60PR	M, MJ, WCH	60 shots	
300m Rifle 3-Positions (kneeling, prone, standing)	300FR3X40	M, WCHS	3 x 40 shots	
300m Standard Rifle 3-Positions (kneeling, prone, standing)	300STR3X20	M, WCHS	3 x 20 shots	
300m Rifle Prone	300FR60PR	M, WCHS	60 shots	
10m Air Pistol	AP60	M, MJ, Olympic, WCH	60 shots	24 shots max.
25m Rapid Fire Pistol (8, 6 and 4 second series)	RFP	M, MJ, Olympic WCH	30 + 30 shots	8 x 5 shots max.
25m Standard Pistol (150, 20 and 10 sec. series)	STP	M, MJ, WCH	20 + 20 + 20 shots	
25m Center Fire Pistol (precision and rapid-fire series)	CFP	M only, WCH	30 + 30 shots	
25m Pistol (precision and rapid-fire series)	SPM	MJ only, WCH	30 + 30 shots	
50m Pistol	FP	M, MJ, WCH	60 shots	
Trap	TR125	M, MJ, Olympic, WCH	125 targets	50 targets max.
Skeet	SK125	M, MJ, Olympic, WCH	125 targets	60 targets max.
Double Trap	DT150	M, MJ, WCH	150 targets	
10m Running Target (slow and fast runs)	10RT	M, MJ, WCHS	30 + 30 shots Medal Match (see 10.8)	
10m Running Target Mixed (slow and fast runs)	10RTMIX	M, MJ, WCHS	40 shots mixed	
50m Running Target (slow and fast runs)	50RT	M, MJ, WCHS	30 + 30 shots	
50m Running Target Mixed (slow and fast runs)	50RTMIX	M, MJ, WCHS	40 shots mixed	

EDITION 2017 | Second Print 01/2018
Copyright: ISSF

EVENTS FOR WOMEN AND WOMEN JUNIOR				
Event Name	**Abbrev.**	**Status**	**Qualification or Full Program**	**Final**
10m Air Rifle (standing)	AR60W	W, WJ, Olympic, WCH	60 Shots	24 shots max.
50m Rifle 3-Positions (kneeling, prone and standing)	R3X40	W, WJ, Olympic, WCH	3 x 40 shots	3 x 15 shots max.
50m Rifle Prone	R60PR	W, WJ, WCH	60 shots	
300m Rifle 3-Positions (kneeling, prone and standing)	300R3X40	W, WCHS	3 x 40 shots	
300m Rifle Prone	300R60PR	W, WCHS	60 shots	
10m Air Pistol	AP60W	W, WJ, Olympic, WCH	60 shots	24 shots max.
25m Pistol (precision and rapid-fire series)	SP	W, WJ, Olympic, WCH	30 + 30 shots	10 x 5 shots max.
Trap	TR125W	W, WJ, Olympic, WCH	125 targets	50 targets max.
Double Trap	DT150W	W, WJ	150 targets	
Skeet	SK125W	W, WJ, Olympic, WCH	125 targets	60 targets max.
10m Running Target (slow and fast runs)	10RTW	W, WJ, WCHS	30 + 30 shots Medal Match (see 10.8)	
10m Running Target Mixed (slow and fast runs)	10RTMIXW	W, WJ, WCHS	40 shots mixed	

MIXED TEAM EVENTS FOR 2-PERSON TEAMS (ONE MALE & ONE FEMALE)				
Event Name	**Abbrev.**	**Status**	**Qualification or Full Program**	**Final**
10m Air Rifle (standing)	ARMIX	M, W, MJ, WJ, Olympic, WCH	40 + 40 shots	2 x 24 shots with eliminations starting after shot number 17
10m Air Pistol	APMIX	M, W, MJ, WJ, Olympic, WCH	40 + 40 shots	2 x 24 shots with eliminations starting after shot number 17
Trap	TRMIX	M, W, MJ, WJ, Olympic, WCH	75 + 75 targets	2 x 25 targets with eliminations starting after 25 targets
Other Mixed Team events may be included in ISSF Championships with the approval of the Executive Committee.				

Copyright: ISSF

6.1 GENERAL

6.1.1 Objective and Purpose of ISSF Rules

The ISSF establishes Technical Rules for the sport of shooting to govern the conduct of shooting events recognized by the ISSF (ISSF General Regulations, 3.3). The objective of ISSF Technical Rules is to achieve uniformity in the conduct of the shooting sport throughout the world and to promote the development of the sport.

a) **ISSF General Technical Rules** include rules for range construction, targets, scoring and specific competition procedures for all shooting disciplines. Discipline Rules apply specifically to the four (4) shooting disciplines: Rifle, Pistol, Shotgun and Running Target;

b) **ISSF General Technical and Discipline Rules** are approved by the ISSF Administrative Council in accordance with the ISSF Constitution;

c) **ISSF General Technical and Discipline Rules** are subordinate to the ISSF Constitution and the ISSF General Regulations; and

d) **ISSF General Technical and Discipline Rules** are approved to be effective for a period of four (4) years beginning on 1 January of the year following the Olympic Games. Except in special situations, ISSF Rules are not changed during this four (4) year period.

EDITION 2017 | Second Print 01/2018
Copyright: ISSF

6.1.2 Application of ISSF General Technical and Discipline Rules

a) ISSF Championships are shooting sport competitions in the Olympic Games, World Championships, World Cups, World Cup Finals, Continental Championships, Continental Games, Junior World Championships and Junior World Cups that are supervised by the ISSF in accordance with the ISSF General Regulations, 3.2.1, and these Rules;

b) The ISSF, with the approval of the Executive Committee, may designate other competitions that fulfill ISSF standards for supervision (i.e. Technical Delegate, Juries, doping control, entry procedures, results management, etc.) as competitions where MQS scores may be obtained and where World Records may be established.

c) ISSF General Technical and Discipline Rules must govern all ISSF Championships;

d) The ISSF recommends that ISSF Rules should also be used to govern regional, national and other competitions that are not ISSF Championships, but where ISSF events are on the program;

e) All competition officials, athletes, coaches and team leaders must be familiar with the ISSF Rules and must ensure that they are enforced;

f) It is the responsibility of every athlete to comply with these Rules;

g) When a Rule refers to right-handed athletes, the reverse of that Rule applies to left-handed athletes; and

h) Unless a Rule applies specifically to a men's or women's event, it must apply uniformly to both men's and women's events.

i) Where diagrams and tables in these rules contain specific information, the specific information in these diagrams and tables has the same authority as the numbered rules.

6.1.3 Scope of ISSF Technical Rules

ISSF Technical Rules include:

a) Rules for the preparation and organization of ISSF Championships;

b) Rules that apply to all shooting disciplines or more than one shooting discipline (General Technical Rules); and

c) Rules that apply to one shooting discipline (Special Technical Rules).

Copyright: ISSF

6.1.4 Uniform Standard for Equipment and Clothing

Shooting is a sport where equipment and clothing play critical roles in the conduct of the sport. Athletes must use only equipment and clothing that complies with ISSF Rules. Any gun, device, equipment, accessory or other item that may give an athlete an unfair advantage over others and that is not specifically mentioned in these Rules, or that is contrary to the spirit of these Rules, is prohibited. ISSF Rules for equipment and clothing are strictly enforced (see 6.7.9) to ensure that no athletes have equipment, clothing or accessories that give them an unfair advantage over other athletes.

6.1.5 Organization and Supervision of ISSF Championships

6.1.5.1 **ISSF Supervision**. The ISSF Executive Committee appoints ISSF Technical Delegates, Jury Members and technical officials for every ISSF Championship in accordance with 1.8.2.6 and 3.4. These appointments include:

a) Technical Delegate(s);

b) Competition Jury(ies);

c) A Jury of Appeal; and

d) An Official Results Provider responsible for providing and operating the electronic technology necessary for the management of entries, athletes' results, competition operations, results presentation and results archiving.

6.1.5.2 **Organizing Committee**. An Organizing Committee must be formed for every ISSF Championship in accordance with 3.4.1. The Organizing Committee is responsible for the preparation, administration and conduct of the shooting competitions. The Organizing Committee must appoint:

a) Chief Range Officer(s), Range Officers, a Chief of Referees and Referees, as appropriate, who are responsible for the actual conduct of the shooting events;

b) A Chief RTS (Results Timing and Scoring) Officer and necessary assistants to establish a RTS Office responsible for entries, accreditation, scoring and results operations during the Championship;

c) A Chief of Equipment Control and appropriate Equipment Control Officers who are responsible for Equipment Control operations; and

d) All other staff necessary to fulfill their responsibilities as an ISSF Championship Organizer.

6.2 SAFETY

SAFETY IS OF PARAMOUNT IMPORTANCE

EDITION 2017 | Second Print 01/2018
Copyright: ISSF

6.2.1 General Safety Rules

6.2.1.1 ISSF Rules establish specific safety requirements that must be applied in all ISSF Championships. ISSF Juries and Organizing Committees are responsible for safety.

6.2.1.2 Necessary and special safety regulations for ranges differ from country to country so additional safety rules may be established by the Organizing Committee. Juries, range officials, team officials and athletes must be advised of any special safety regulations in the competition program.

6.2.1.3 The safety of athletes, range officials and spectators requires continued and careful attention to gun handling. It is the duty of range officials to enforce gun safety and the duty of athletes and team officials to apply all gun safety and gun handling rules.

6.2.1.4 The ISSF may refuse to accept the entry of an athlete in a competition if it has substantial information from competent authorities that such an athlete presents a serious threat to the safety of others on a shooting range.

6.2.1.5 In the interest of safety, a Jury Member or Range Officer may stop shooting at any time. Athletes and team officials must immediately notify Range Officers or Jury Members of any situation that may be dangerous.

6.2.1.6 An Equipment Control Officer, Range Officer or Jury Member may pick up an athlete's equipment (including a gun) for control without his permission, but in his presence and with his knowledge. However, immediate action must be taken when a matter of safety is involved.

6.2.2 Gun Handling Rules

6.2.2.1 To ensure safety, all guns must be handled with maximum care at all times. Guns must not be removed from the firing line during training or competition except with the permission of a Range Officer.

Copyright: ISSF

6.2.2.2 Safety flags constructed of fluorescent orange or a similar bright material must be inserted in all rifles, pistols and semi-automatic shotguns at all times except when safety flag removal is authorized by these rules. To demonstrate that air guns are unloaded, safety flags (safety lines) must be long enough to extend through the full length of the barrel. Safety flags for all other guns must have a probe that inserts into the chamber (breech end of barrel) to demonstrate that the chamber is empty. Shotgun actions must be open (broken) to demonstrate that they are unloaded.

a) Safety flags may not be removed until Preparation and Sighting Times start.

b) If a safety flag is not used as required by this rule, a Jury Member must give a WARNING with instructions to insert a safety flag in the gun; and

c) If the Jury confirms that an athlete refuses to use a safety flag as required by this rule and after being warned, the athlete must be disqualified (DSQ).

6.2.2.3 While athletes are on their firing points, their guns must always be pointed in safe directions. The action or breech must not be closed until the gun is pointing downrange in a safe direction toward the target area.

6.2.2.4 When placing a gun down to leave the firing point or when firing is complete, guns must be unloaded with actions (bolt or locking mechanism) open and safety flags inserted. Before leaving a firing point, the athlete must confirm and the Range Officer **must verify** that there is no cartridge or pellet in the gun's chamber, barrel or magazine and a safety flag is inserted.

6.2.2.5 If the athlete boxes or cases his gun or removes it from the firing point without having it checked by a Range Officer, he may be disqualified if the Jury determines that a significant safety violation is involved.

6.2.2.6 During firing, the gun may be put down (not held) only after the cartridge(s) and/or magazine are removed and the action is open. Air guns must be made safe by opening the cocking lever or loading port.

6.2.2.7 When any personnel are forward of the firing line, handling guns is not permitted and safety flags must be inserted. If it is necessary for a Jury member, Range Officer or Technical Officer to go forward of the firing line during training, competition or a Final, this must be authorized and controlled by the Chief Range Officer (CRO) and any movement forward of the firing line may only be permitted after all guns have safety flags inserted.

6.2.2.8 In the range, when guns are not on the firing points, they must always be in their cases, unless otherwise authorized by a Range Officer.

EDITION 2017 | Second Print 01/2018
Copyright: ISSF

6.2.3 Range Commands

6.2.3.1 Chief Range Officers, or other appropriate range officials, are responsible for giving the commands **"LOAD," "START," "STOP," "UNLOAD"** and other necessary commands. Range Officers must ensure that the commands are obeyed and that guns are handled safely.

6.2.3.2 Guns and their magazines may only be loaded on the firing point and after the command **"LOAD"** or **"START"** is given. At all other times, guns and magazines must be kept unloaded.

6.2.3.3 Only one cartridge may be loaded in a Rifle or 50m Pistol event if it has a magazine. If a 5-shot Air Pistol is used in a 10m Air Pistol event only one pellet may be loaded.

6.2.3.4 A gun is considered loaded when a cartridge or pellet or a magazine with cartridges contacts a gun. No one may place a cartridge or pellet or magazine with cartridges in or on a gun or its chamber or barrel until the command "**LOAD**" is given.

6.2.3.5 If an athlete fires a shot before the command **"LOAD"** or **"START"** is given, or after the command **"STOP"** or **"UNLOAD"** is given, he may be disqualified if safety is involved.

6.2.3.6 When the command or signal **"STOP"** is given, shooting must stop immediately. When the command **"UNLOAD"** is given, all athletes must unload their guns and magazines, and make them safe (to unload air guns ask the Range Officer for permission). Shooting may only resume when the command **"START"** is given again.

6.2.4 Additional Safety Requirements

6.2.4.1 **Dry Firing** is the release of the cocked trigger mechanism of an unloaded cartridge gun or the release of the trigger mechanism of an air or gas gun fitted with a device which enables the trigger to be operated without releasing the propelling charge (air or gas). Dry firing and aiming exercises are permitted only on the firing line or in a designated area in accordance with these rules.

6.2.4.2 It is the athlete's responsibility to ensure that any air or CO2 cylinder is still within its validity date. This may be checked by Equipment Control.

Copyright: ISSF

6.2.5 Hearing Protection

All athletes, range officials and other persons in the immediate vicinity of the 25m, 50m and 300m firing lines and all Shotgun ranges are urged to wear ear plugs, ear muffs, or similar ear protection. Notices must be prominently displayed and hearing protection must be available for all persons in the range areas. Hearing protection incorporating any type of sound-enhancing or receiving devices may not be worn by athletes or coaches on the FOP. Competition officials may wear sound-enhancing hearing protection devices or other communication devices on the FOP. Hearing impaired athletes may wear sound-enhancing devices with the approval of the Jury.

6.2.6 Eye Protection

All athletes are urged to wear shatterproof shooting glasses or similar eye protection while shooting.

6.3 TARGETS AND TARGET STANDARDS

6.3.1 General Target Requirements

6.3.1.1 Targets used in ISSF Championships may be either electronic scoring targets (EST) or paper targets for Rifle and Pistol events or clay targets for Shotgun events. **Note: Specific Rules for paper target operations are now available in the Annex to these Rules, Rules for Paper Target Scoring.**

6.3.1.2 All targets used in ISSF Championships must comply with the scoring ring, dimension or other specifications given in these rules.

6.3.1.3 Samples of clay targets (twenty (20) qualification targets and twenty (20) powder filled Finals targets) that are to be used in ISSF Championships must be submitted to the ISSF Secretary General for testing, verification of specifications and approval at least six (6) months prior to the start of each Championship

6.3.2 Electronic Scoring Target Requirements

6.3.2.1 Only EST tested and approved by the ISSF may be used.

6.3.2.2 The accuracy requirement for EST is to score shots to an accuracy of at least one-half of one decimal scoring ring. The tolerances given for scoring ring sizes on paper targets are not applicable to EST.

6.3.2.3 All EST target units must provide a black aiming area corresponding in size to the black areas of the respective competition targets (Rule 6.3.4) and a non-reflective, contrasting white or off-white area surrounding the aiming area.

6.3.2.4 Scores recorded by EST must be determined according to scoring ring dimensions for competition targets (Rule 6.3.4).

EDITION 2017 | Second Print 01/2018
Copyright: ISSF

6.3.2.5 Every shot hitting an EST must have its result with its location and value displayed on a monitor placed on the firing point.

6.3.2.6 10m EST must use a paper strip or other form of witness strip to allow a determination that a shot fired did, or did not, hit the target.

6.3.2.7 A printout of each athlete's results from a memory source other than the main EST system computer (back-up memory) must be available immediately during and after a competition.

6.3.2.8 When EST are used, the targets must be checked to ensure the targets are scoring correctly under normal conditions of use before each ISSF Championship under the supervision of the Technical Delegate.

6.3.3 ISSF Target Standards

Targets must comply with the scoring ring dimensions, tolerances and specifications in this rule.

6.3.3.1 Rifle and Pistol targets may be scored in full ring values or, if ESTs or electronic paper target scoring machines are used, in decimal ring values. Decimal ring scores are determined by dividing the scoring area for one full ring into ten equal scoring rings that are designated with decimal values starting with zero (i.e. 10.0, 9.0, etc.) and ending with nine (i. e. 10.9, 9.9, etc.);

6.3.3.2 Rifle and Pistol Elimination and Qualification Round competitions are scored in full ring values, except that in ISSF Championships, Elimination and Qualification Round competitions for 10m Air Rifle Men and Men Junior, 10m Air Rifle Women and Women Junior, 50m Rifle Prone Men and Men Junior and 50m Prone Women and Women Junior, 10m Air Rifle Mixed Team and Mixed Team Junior events must be scored in decimal values.

6.3.3.3 Rifle and Pistol Finals, Rifle Mixed Team Qualification and Finals and Pistol Mixed Team Finals are scored in decimal values, except that 25m Pistol Finals use hit-miss scoring with hit zones based on decimal values established by these Rules.

Copyright: ISSF

6.3.4 Official ISSF Targets

6.3.4.1 300m Rifle Target

10 Ring	100 mm	(±0.5 mm)	5 Ring	600 mm	(±3.0 mm)
9 Ring	200 mm	(±1.0 mm)	4 Ring	700 mm	(±3.0 mm)
8 Ring	300 mm	(±1.0 mm)	3 Ring	800 mm	(±3.0 mm)
7 Ring	400 mm	(±3.0 mm)	2 Ring	900 mm	(±3.0 mm)
6 Ring	500 mm	(±3.0 mm)	1 Ring	1000 mm	(±3.0 mm)

Inner Ten = 50 mm (±0.5 mm).

Black from 5 to 10 rings = 600 mm (±3.0 mm).

Ring Thickness: 0.5 mm to 1.0 mm.

Minimum visible size of target card: 1300 mm x 1300 mm (or minimum 1020 mm x 1020 mm providing the background on which the target is mounted is the same color as the target).

Scoring ring values 1 – 9 are printed in the scoring zones, in diagonal lines at right angles to each other.

The 10-point zone is not marked with a number.

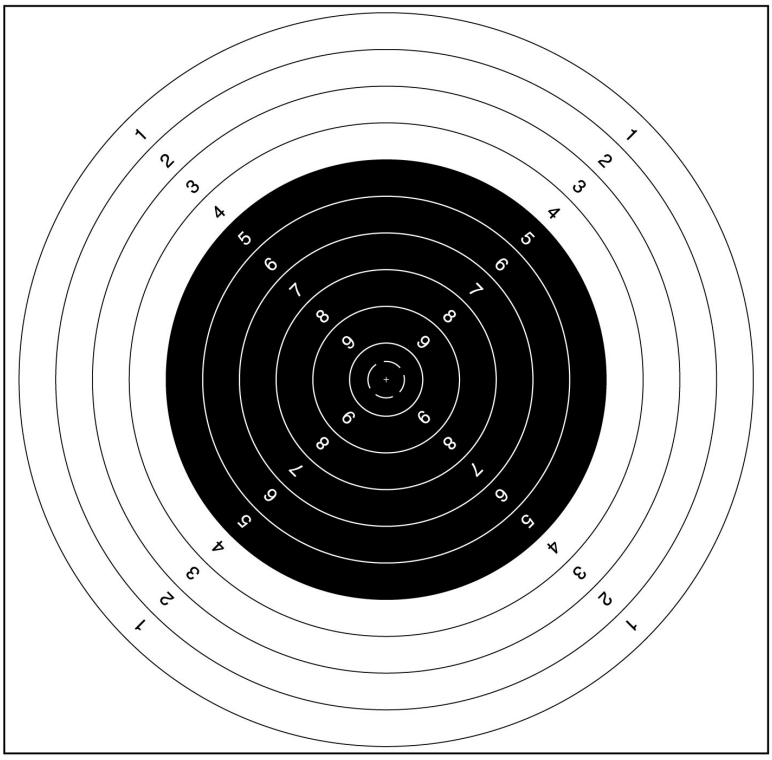

300m Rifle Target

EDITION 2017 | Second Print 01/2018
Copyright: ISSF

6.3.4.2 **50m Rifle Target**

10 Ring	10.4 mm	(±0.1 mm)	5 Ring	90.4 mm	(±0.5 mm)
9 Ring	26.4 mm	(±0.1 mm)	4 Ring	106.4 mm	(±0.5 mm)
8 Ring	42.4 mm	(±0.2 mm)	3 Ring	122.4 mm	(±0.5 mm)
7 Ring	58.4 mm	(±0.5 mm)	2 Ring	138.4 mm	(±0.5 mm)
6 Ring	74.4 mm	(±0.5 mm)	1 Ring	154.4 mm	(±0.5 mm)

Inner Ten = 5 mm (±0.1 mm).

Black from part of 3 to 10 rings = 112.4 mm (±0.5 mm).

Ring Thickness: 0.2 mm to 0.3 mm.

Minimum visible size of target card: 250 mm x 250 mm.

Scoring ring values 1 – 8 are printed in the scoring zones in vertical and horizontal lines, at right angles to each other.

The 9 and 10-point zones are not marked with a number.

Insert targets (200 mm x 200 mm) may be used.

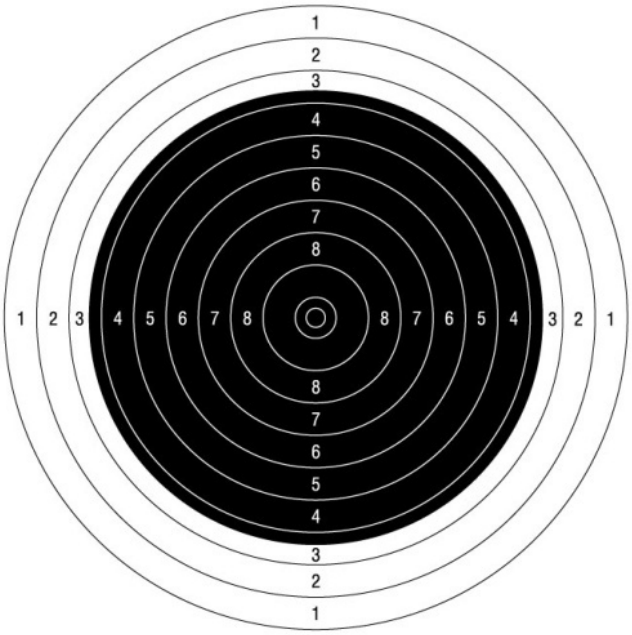

50m Rifle Target

Copyright: ISSF

6.3.4.3 **10m Air Rifle Target**

10 Ring	0.5 mm	(±0.1 mm)	5 Ring	25.5 mm	(±0.1 mm)
9 Ring	5.5 mm	(±0.1 mm)	4 Ring	30.5 mm	(±0.1 mm)
8 Ring	10.5 mm	(±0.1 mm)	3 Ring	35.5 mm	(±0.1 mm)
7 Ring	15.5 mm	(±0.1 mm)	2 Ring	40.5 mm	(±0.1 mm)
6 Ring	20.5 mm	(±0.1 mm)	1 Ring	45.5 mm	(±0.1 mm)

Inner Ten: When the 10 ring (dot) has been shot out completely as determined by the use of an Air Pistol OUTWARD scoring gauge.

Black from 4 to 9 rings = 30.5 mm (±0.1 mm).

The ten ring is a white dot = 0.5 mm (±0.1 mm).

Ring thickness: 0.1 mm to 0.2 mm.

Minimum visible size of target card: 80 mm x 80 mm.

Scoring ring values 1 – 8 are printed in the scoring zones in vertical and horizontal lines, at right angles to each other. The 9 point zone is not marked with a number. The 10 is a white dot.

Background cards 170 mm x 170 mm, similar in color to the target material should be provided to improve the visibility of the target.

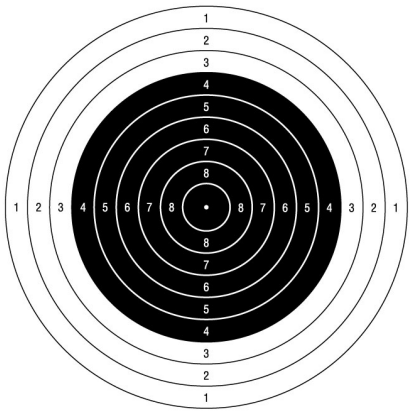

10m Air Rifle Target

EDITION 2017 | Second Print 01/2018
Copyright: ISSF

6.3.4.4 25m Rapid Fire Pistol Target

(for the 25m Rapid Fire Pistol event and the Rapid Fire stages of the 25m Center Fire and 25m Pistol events):

10 Ring	100 mm	(±0.4 mm)	7 Ring	340 mm	(±1.0 mm)
9 Ring	180 mm	(±0.6 mm)	6 Ring	420 mm	(±2.0 mm)
8 Ring	260 mm	(±1.0 mm)	5 Ring	500 mm	(±2.0 mm)

Inner Ten: 50 mm (±0.2 mm).

Black from 5 to 10 rings = 500 mm (±2.0 mm).

Ring thickness: 0.5 mm to 1.0 mm.

Minimum visible size of target card: width: 550 mm;

height: 520 mm – 550 mm.

Scoring ring values 5 – 9 are printed in the scoring zones, in vertical lines only. The 10 point zone is not marked with a number. The zone numbers must be approximately 5 mm high and 0.5 mm thick. White horizontal aiming lines replace the ring values at the left and the right side of the target center. Each of the lines is 125 mm long and 5 mm wide.

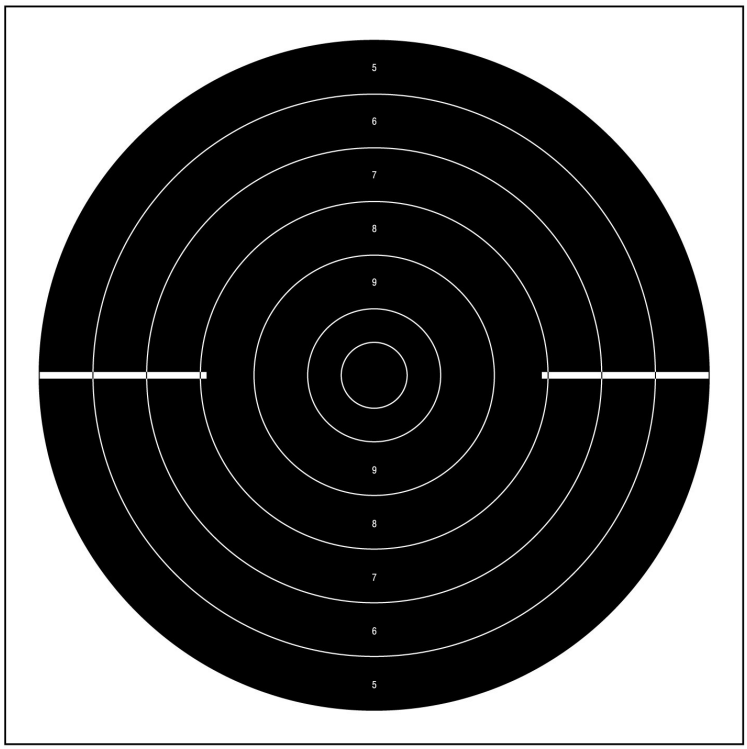

25m Rapid Fire Pistol Target

Copyright: ISSF

6.3.4.5 25m Precision and 50m Pistol Target

(for the 50m Pistol and 25m Standard Pistol events and the precision stage of the 25m Center Fire and the 25m Pistol events)

10 Ring	50 mm	(±0.2 mm)	5 Ring	300 mm	(±1.0 mm)
9 Ring	100 mm	(±0.4 mm)	4 Ring	350 mm	(±1.0 mm)
8 Ring	150 mm	(±0.5 mm)	3 Ring	400 mm	(±2.0 mm)
7 Ring	200 mm	(±1.0 mm)	2 Ring	450 mm	(±2.0 mm)
6 Ring	250 mm	(±1.0 mm)	1 Ring	500 mm	(±2.0 mm)

Inner ten: 25 mm (±0.2 mm).

Black from 7 to 10 rings = 200 mm (±1.0 mm).

Ring thickness: 0.2 mm to 0.5 mm.

Minimum visible size of target card: width: 550 mm;

height: 520 mm - 550 mm.

Scoring ring values 1 – 9 are printed in the scoring zones, in vertical and horizontal lines, at right angles to each other. The 10-point zone is not marked with a number. Zone numbers must be approximately 10mm high, 1 mm thick and must be read easily with normal spotting telescopes at the appropriate distance.

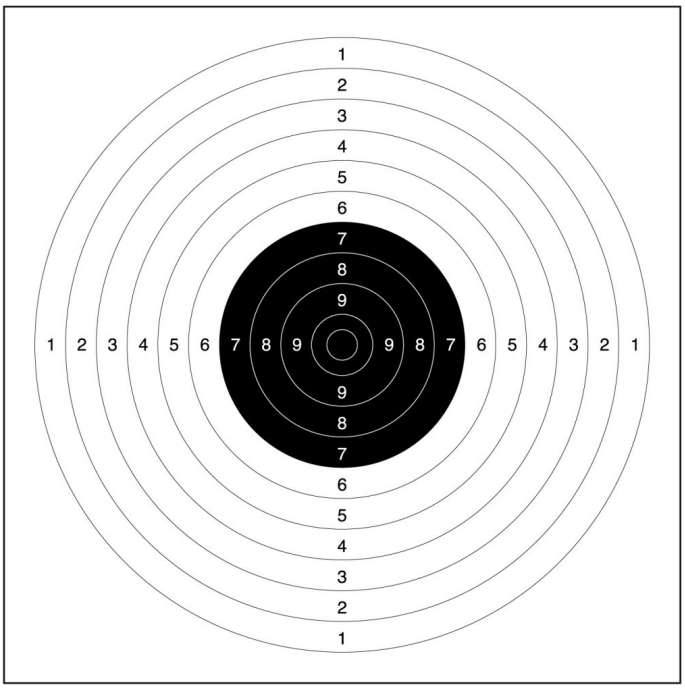

25m Precision and 50m Pistol Target

EDITION 2017 | Second Print 01/2018
Copyright: ISSF

6.3.4.6 **10m Air Pistol Target**

10 Ring	11.5 mm	(±0.1 mm)	5 Ring	91.5 mm	(±0.5 mm)
9 Ring	27.5 mm	(±0.1 mm)	4 Ring	107.5 mm	(±0.5 mm)
8 Ring	43.5 mm	(±0.2 mm)	3 Ring	123.5 mm	(±0.5 mm)
7 Ring	59.5 mm	(±0.5 mm)	2 Ring	139.5 mm	(±0.5 mm)
6 Ring	75.5 mm	(±0.5 mm)	1 Ring	155.5 mm	(±0.5 mm)

Inner ten: 5.0 mm (±0.1 mm).

Black from 7 to 10 rings = 59.5 mm (±0.5 mm).

Ring thickness: 0.1 mm to 0.2 mm.

Minimum visible size of target card: 170 mm x 170 mm.

The scoring ring values 1 to 8 are printed in the scoring zones in vertical and horizontal lines, at right angles to each other. The ten and the nine zones are not marked with a number. The zone numbers must not be more than 2 mm high.

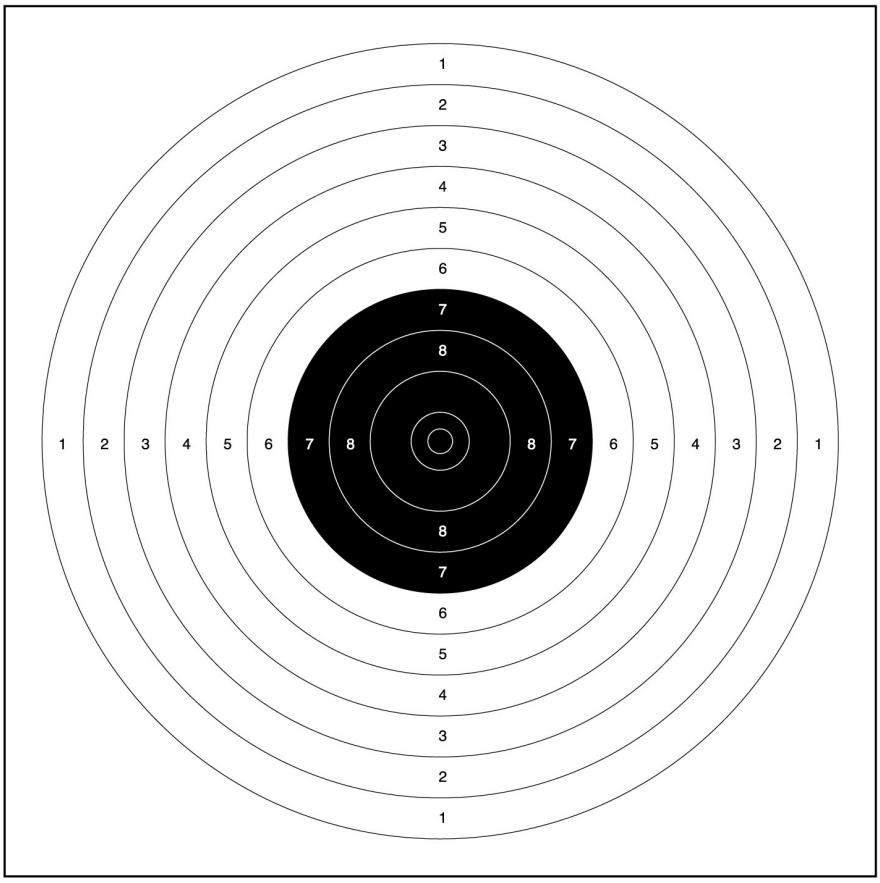

10m Air Pistol Target

Copyright: ISSF

6.3.4.7 50m Running Target

The 50m Running Target depicts a running wild boar with scoring rings printed on the shoulder of the animal. Targets must be printed in one color only. The Running Target is printed to show the animal running in left and right directions. The animal must be printed on a rectangular-shaped target paper. Trimming the frame to the shape of the animal is not permitted (see Figure A).

10 Ring	60 mm	(±0.2 mm)	5 Ring	230 mm	(±1.0 mm)
9 Ring	94 mm	(±0.4 mm)	4 Ring	264 mm	(±1.0 mm)
8 Ring	128 mm	(±0.6 mm)	3 Ring	298 mm	(±1.0 mm)
7 Ring	162 mm	(±0.8 mm)	2 Ring	332 mm	(±1.0 mm)
6 Ring	196 mm	(±1.0 mm)	1 Ring	366 mm	(±1.0 mm)

Inner ten: 30 mm (±0.2 mm).

Ring thickness: 0.5 mm to 1.0 mm.

The center of the 10 ring must be 500 mm from the tip of the nose of the boar measured on a horizontal line.

Scoring ring values 1 to 9 must be printed clearly in the appropriate scoring zones in diagonal lines at right angles to each other.

Repair centers (C) or half targets (B) may be used. The repair centers or half targets must be correctly placed on the full target.

A single 50m Running Target with two heads, one running in each direction, and with two scoring ring areas may be used for Paper Targets (D).

A single 50m Running Target with two heads, one running in each diection, and with one scoring ring area may be used for ESTs (E).

EDITION 2017 | Second Print 01/2018
Copyright: ISSF

A

B

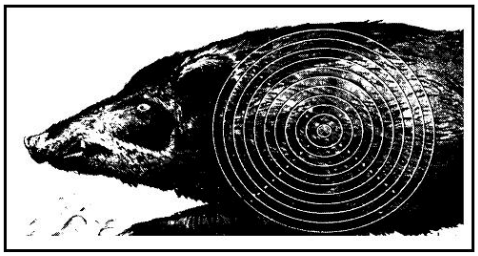

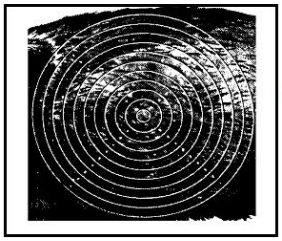

C

50m Running Target for Paper Targets

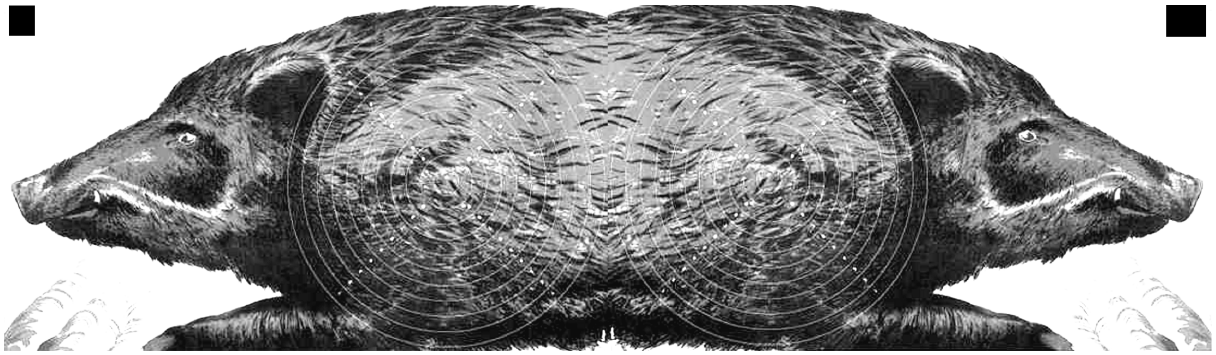

D) 50m Running Target for ESTs

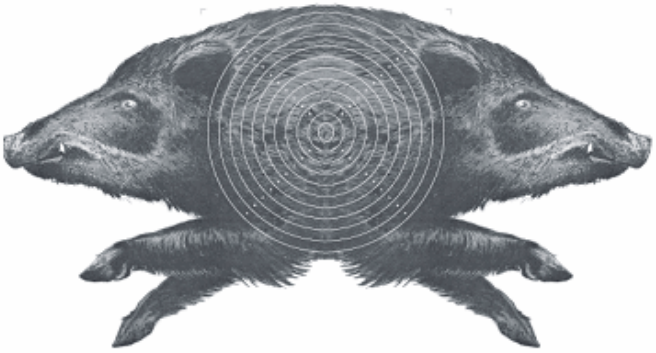

Copyright: ISSF

6.3.4.8 10m Running Target

The 10m Running Target is a single card with two scoring zones each with rings 1 to 10 on the two sides and a single aiming mark in the center.

10 Ring	5.5 mm	(±0.1 mm)	5 Ring	30.5 mm	(±0.1 mm)
9 Ring	10.5 mm	(±0.1 mm)	4 Ring	35.5 mm	(±0.1 mm)
8 Ring	15.5 mm	(±0.1 mm)	3 Ring	40.5 mm	(±0.1 mm)
7 Ring	20.5 mm	(±0.1 mm)	2 Ring	45.5 mm	(±0.1 mm)
6 Ring	25.5 mm	(±0.1 mm)	1 Ring	50.5 mm	(±0.1 mm)

Inner ten is white: 0.5 mm (±0.1 mm), gauged in the same way as rings 3 – 10.

Black from 5 to 10 rings = 30.5 mm (±0.1 mm).

Ring thickness: 0.1 mm to 0.2 mm.

Recommended size of target card: 260 mm x 150 mm (minimum 260 mm x 140 mm).

The center of the 10 ring must be 70 mm (±0.2 mm) from the center of the aiming mark measured on a horizontal line.

Scoring ring values 1 to 9 must be printed clearly in the appropriate scoring zones in diagonal lines at right angles to each other.

The aiming mark is black with an outside diameter of 15.5 mm and must include white rings of the size of the 10 (5.5 mm) and 9 (10.5 mm) rings and a white central dot (0.5 mm).

10m Running Target Paper Target

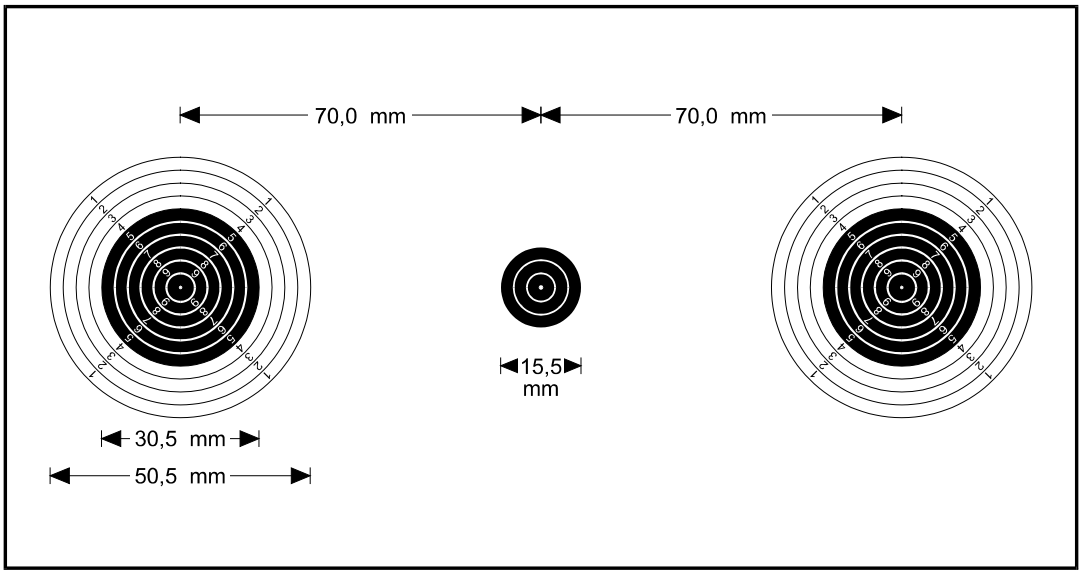

EDITION 2017 | Second Print 01/2018
Copyright: ISSF

10m Running Target Electronic Target

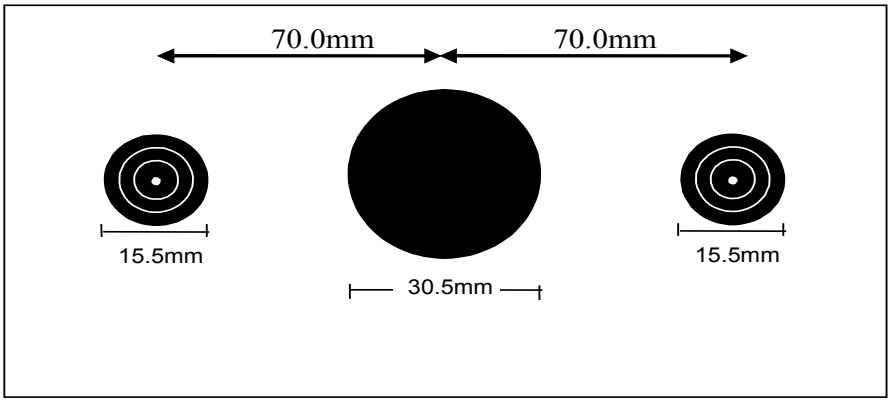

The 30.5 mm diameter is a hole.

6.3.5 Target Control Systems

For Rifle and Pistol events, target marking and control systems must be used to facilitate the conduct of competitions.

6.3.5.1 EST Target Control Systems

Backing Targets, Backing Cards and Control Sheets are used as control systems for ESTs (see diagram).

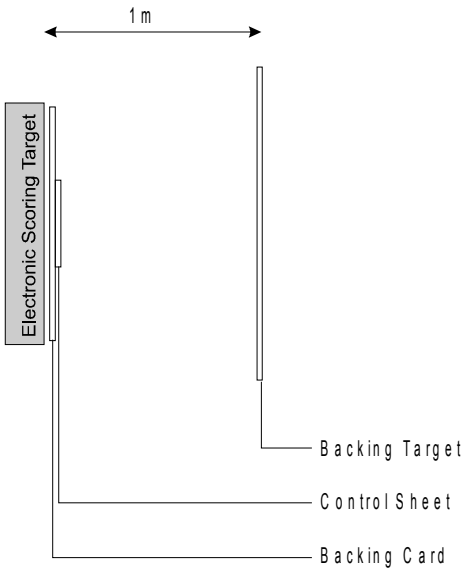

Copyright: ISSF

6.3.5.2 **Backing Targets for 50m and 300m ESTs**

To locate cross-shots, backing targets must, if possible, be placed 0.5 m – 1.0 m behind the targets. The exact distance between the target and the backing target must be measured and recorded and, as far as possible, be the same for all targets.

6.3.5.3 **Backing Targets for 25m ESTs**

a) Backing targets must be used for all 25m Pistol events to assist in the identification of shots that may have missed the targets;

b) Backing targets must, at a minimum, cover the entire width and height of the 25m frames (5 targets). They should be located a uniform distance of one (1) meter behind the competition targets. They must be continuous, or on adjoining frames, without any spaces between them, to register any shots between competition targets;

c) Backing targets for 25m ESTs must be made of non-reflecting paper of a neutral color similar to the color of the target; and

d) For 25m events, new backing targets must be provided for each athlete for each stage.

6.3.5.4 **Control Sheets for 25m ESTs**

The area immediately behind the ESTs must be covered by control sheets. New control sheets must be provided for each athlete for each stage.

If the location of any shot hole is outside of the control sheet, the geometric relation between the shot holes on the control sheet and the backing card must be noted before the control sheet is removed.

6.3.5.5 **Backing Cards and Control Sheets for 50m and 300m ESTs**

A backing card must be affixed to the rear of all 50m and 300m ESTs. Smaller, replaceable control sheets should be affixed to the backing cards. The control sheets or backing cards must be renewed and collected after each relay. If the location of any shot hole is outside of the control sheet, the geometric relation between the shot holes on the control sheet and the backing card must be noted before the control sheet is removed.

EDITION 2017 | Second Print 01/2018
Copyright: ISSF

6.3.6 Clay Targets for Shotgun Events

Diameter:	110 mm (±1 mm).
Height:	25 mm to 26 mm.
Weight:	105 g (±5 g).

The color of the targets may be all black, all white, all yellow, all orange; or the full dome may be painted white, yellow, or orange; or a ring may be painted around the dome in white, yellow or orange.

The clay target color must be specified in the program of each ISSF Championship with Shotgun events. The target color must be clearly visible against the range background under all normal light conditions. The same color targets must be used for training.'

Clay targets used in the Olympic Games, World Championships, World Cups, World Cup Finals and Junior World Cups must be eco-friendly targets that comply with appropriate international standards (contact ISSF Headquarters for details).

Copyright: ISSF

6.3.6.1 General Specifications for Clay Targets

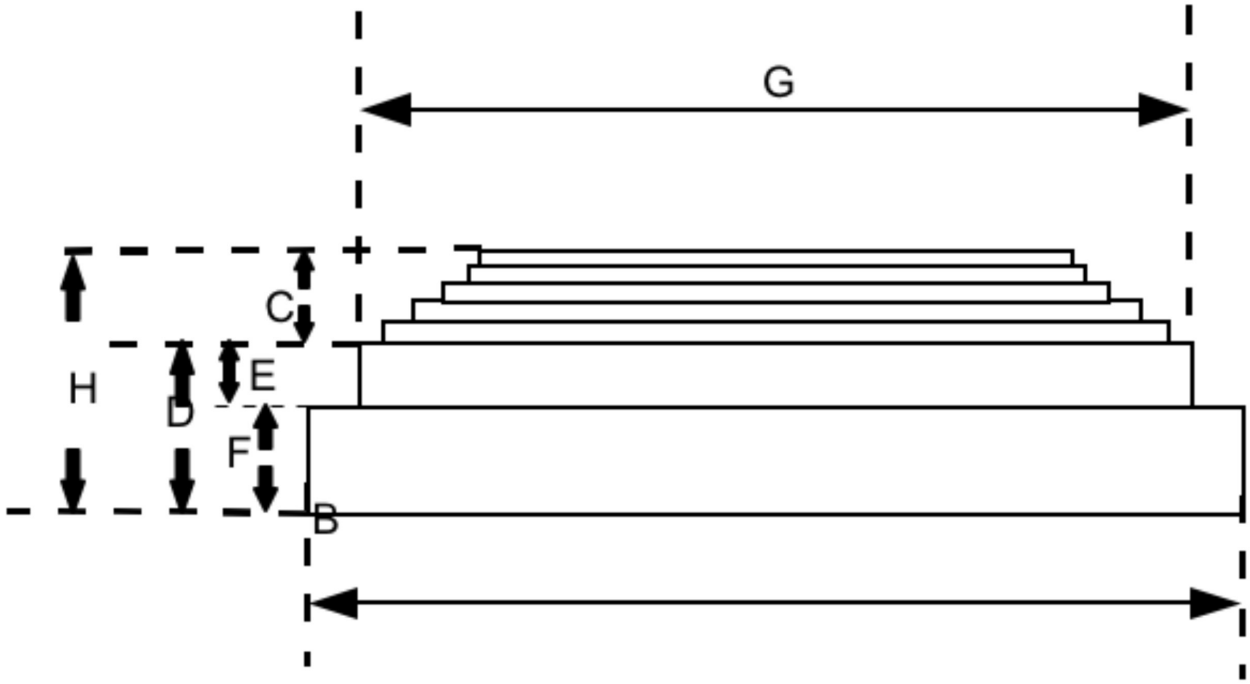

A-Weight	105 g ± 5 g	E-Rotating Ring Height	7 mm ± 1 mm
B-Base Ø	110 mm ± 1 mm	F-Base Height	11 mm ± 1 mm
C-Dome Height*	8 mm ± 1 mm	G-Rotating Ring	95 mm – 98 mm
D-Base & Ring Height	18 mm ± 1 mm	H-Total Height	18 mm ± 1 mm

“G” - The actual shape of the target dome is to be engineered to provide the best aerodynamic design and flight stability.

“Breakability” – Targets must be capable of withstanding the force of the trap to be thrown to a distance of 80 m and to be easily breakable when hit with normal ISSF Skeet and Trap cartridges within normal shooting distances.

EDITION 2017 | Second Print 01/2018
Copyright: ISSF

6.3.6.2 **“Flash” Targets**

a) In Shotgun Finals, “Flash” targets containing colored, non-toxic powder that contrasts with the range background must be used.

b) In Shotgun Qualification Rounds and Shoot-offs before Finals, “Flash” targets containing ISSF approved non-toxic, colored powder may be used.

c) If a target of the same external color, but containing the incorrect colored powder, is inadvertently thrown, the results of any shot at that target must be recorded.

d) In all cases where “Flash” targets are used, the “Flash” targets must comply with Rule 6.3.6.1.

6.3.6.3 **Clay Target Testing**

An ISSF approved clay target testing device must be used to test the breakability of clay targets. Standards for the use of such devices will be established by the ISSF Shotgun and Technical Committees.

6.4 RANGES AND OTHER FACILITIES

6.4.1 General Requirements

6.4.1.1 Requirements for minimum range sizes for ISSF Championships are given in Rule 3.5.1. While those requirements are the minimum, the practical requirement for Shotgun World Championships and large World Cups is that five (5) ranges are recommended. For large Rifle/Pistol World Cups, 80 10m and 80 50m firing points are recommended.

6.4.1.2 A separate Rifle/Pistol Finals Range is required for World Championships and the Olympic Games. The ISSF recommends that a separate Finals Range be available for World Cups.

6.4.1.3 Continental Confederations must establish minimum range requirements for Continental Championships.

6.4.1.4 Trap and Skeet ranges may be combined. Trap ranges must be convertible to Double Trap unless separate Double Trap ranges are provided. If possible, Trap and Skeet Finals Ranges should be on the same field.

6.4.1.5 The area used by athletes, officials and spectators on Rifle and Pistol ranges must be covered to provide protection from sun, wind and rain. This protection must not give a significant advantage to any firing point or part of the range.

6.4.1.6 The ISSF recommends that all new ranges be accessible to disabled persons. Existing ranges should be adapted to make them accessible to disabled persons.

Copyright: ISSF

6.4.1.7 It is recommended that ranges used for World Championships and Olympic Games be completed at least one (1) year in advance.

6.4.1.8 Electronic target systems (EST) of makes and models approved by the ISSF must be used for Rifle and Pistol Eliminations, Qualifications and Finals in the Olympic Games, ISSF World Championships and in ISSF World Cups. Electronic target systems must include monitors or video boards that display individual shots and scores for spectators as well as displays that show ranked incomplete results during the competitions.

6.4.1.9 Technical Delegates are responsible for examining the ranges and other facilities to ensure that they comply with ISSF Rules and are prepared for the conduct of the Championship. Technical Delegates should use the Checklist for Technical Delegates to examine the organization, ranges and facilities (available from ISSF Headquarters).

6.4.1.10 A Technical Delegate may approve small deviations from specifications in ISSF Rules that do not conflict with the intent and spirit of ISSF Rules, except that no deviations in shooting distances or target specifications are allowed.

EDITION 2017 | Second Print 01/2018
Copyright: ISSF

6.4.2 General and Administrative Facilities

The following facilities must be provided on or near the shooting ranges:

a) Athlete rest areas;

b) Changing rooms for athletes near the Finals and Qualification Ranges;

c) Meeting rooms for use by ISSF officials and Juries;

d) Rooms for Organizing Committee offices and administration;

e) A room with adequate storage for RTS (results, timing and scoring) operations;

f) Control rooms on each range for RTS (results, timing and scoring) and results provider operations;

g) Dry firing or warm-up areas for all rifle, pistol and shotgun ranges;

h) All 10m Ranges must have a supply of compressed air that is accessible to athletes and coaches; compressed air tanks must be securely fastened to a wall or other structure so they cannot be tipped over;

i) One Main Scoreboard for posting official results and notices, and smaller Range Scoreboards on each range for posting competition schedules and preliminary results; a scoreboard should also be placed in the athletes rest area;

j) An armory for secure arms storage;

k) An equipment control testing area, with changing rooms;

l) A gunsmith's shop with suitable work benches and vices;

m) Free facilities for firearms and equipment manufacturers to service their products;

n) An area for commercial displays should be available; a fee may be charged for such displays;

o) A restaurant or facilities for food service and refreshments;

p) Adequate toilet facilities;

q) Wireless Internet and email communication services; separate internet services must be provided for operations (results services, ISSF TV, administration) and for the public;

r) A Victory Ceremony area or a portable Victory Ceremony podium and backdrop that can be set up on the Finals Range;

Copyright: ISSF

s) Facilities for media, radio and television representatives;

t) Facilities for Anti-Doping testing, with toilets;

u) Appropriate medical facilities; and

v) Parking facilities.

6.4.3 General Standards for 10m, 25m, 50m and 300m Rifle and Pistol Ranges

6.4.3.1 New 25m, 50m and 300m outdoor ranges should be constructed in such a way that the sun is behind the athlete as much as possible during the competition day. The range design must ensure that there are no shadows on the targets.

6.4.3.2 Ranges must have a line of targets and a firing line. The firing line must be parallel to the line of targets.

6.4.3.3 The design and construction of the range may provide the following features:

a) The range may, if necessary, be surrounded by safety walls;

b) Protection against the exit of accidental or unaimed shots from the range may be provided by transverse baffle systems between the firing line and the line of targets;

c) 10m ranges must be indoor ranges.

d) 50m and 25m ranges should, whenever possible, be outdoor ranges, but may, exceptionally, be indoor or closed ranges if required by legal or climatic conditions;

e) 300m ranges should have at least 285 m open to the sky;

f) 50m ranges should have at least 35 m open to the sky;

g) 25m ranges should have at least 12.5 m open to the sky; and

h) 25m and 50m Finals ranges may be indoor or outdoor ranges.

6.4.3.4 There must be sufficient space behind the firing points for the range officials and the Jury to perform their duties. There must also be a space provided for spectators. This area must be separated from the area for athletes and officials by a suitable barrier located at least 7.0 m behind the firing line.

EDITION 2017 | Second Print 01/2018
Copyright: ISSF

6.4.3.5 Each range must be equipped with a large clock (a countdown clock is recommended) at each end of the range where the time can clearly be seen by athletes and officials. The Finals Range preparation area must also have a clock. Range clocks must be synchronized with results computers so that all timing devices show the same time. Rifle and Pistol Finals Ranges must have a count-down timer that shows the time remaining for each shot. Shotgun Ranges must have a count-down timer to use in controlling preparation times.

6.4.3.6 Target frames or mechanisms must be marked with numbers (starting from the left) corresponding to their firing point number. The numbers must be large enough to easily be seen by persons with normal vision under normal conditions. The numbers should be of alternating and contrasting colors.

On 25m targets, each group of five (5) targets must be lettered, starting with the A group on the left. 25m targets must also be individually numbered using numbers 11-20 for the targets in groups A and B, numbers 21-30 for groups C and D, etc.

Copyright: ISSF

6.4.4 Wind Flags for 50m Ranges and 300m Rifle Ranges

6.4.4.1 Rectangular wind flags, which indicate air movements on the range, should be made of a cotton or polyester material weighing approximately 150 g/m². Wind flag height must correspond with the central area of the bullets' flight paths without interfering with the bullet flight paths or athletes' views of the targets. The color of the wind flags must contrast with the background. Dual color or striped wind flags are permitted and recommended.

6.4.4.2 **Wind Flag Dimensions and Locations**

Ranges	Distances	Size of Flag
50m Ranges	10m and 30m	50 mm x 400 mm
300m Ranges	50m	50 mm x 400 mm
	100m and 200m	200 mm x 750 mm

6.4.4.3 On 50m ranges, wind flags are to be placed at fixed distances from the firing line, on imaginary lines separating each firing point and its corresponding target from the adjacent points and targets. Flags must be placed on the athlete's side of any safety baffle supports.

6.4.4.4 If a 50m range is also used as a 10m enclosed range the 10m wind flags must be placed far enough down range so that they give an accurate indication of the wind.

6.4.4.5 On 300m ranges, wind flags are to be placed at the above distances from the firing line on imaginary lines separating every fourth (4th) firing point and its corresponding target from the next point and target. Flags must be placed on the athlete's side of any safety baffle supports.

6.4.4.6 Athletes must check the wind flags before the Preparation and Sighting Time starts to be sure they do not obscure their targets. Only Range Officers or Jury Members may reposition wind flags.

6.4.4.7 Private wind indicators and the repositioning of wind flags by athletes are prohibited.

EDITION 2017 | Second Print 01/2018
Copyright: ISSF

6.4.5 Shooting Distances

6.4.5.1 Shooting distances must be measured from the firing line to the target face.

6.4.5.2 Shooting distances must be as exact as possible, subject to the following allowable variations.

10m Range	±0.05 m
25m Range	±0.10 m
50m Range	±0.20 m
300m Range	±1.00 m
10m Running Target Range	±0.05 m
50m Running Target Range	±0.20 m

6.4.5.3 In combined 50m Rifle, Pistol and Running Target ranges, the allowable variation can be increased to +2.50 m for Running Target. The opening must be accordingly adjusted.

6.4.5.4 The firing line must be clearly marked. The range distance must be measured from the target line to the edge of the firing line nearest to the athlete. The athlete's foot or, in the prone position the athlete's elbow may not be placed on or in front of the firing line.

Copyright: ISSF

6.4.6 Target Center Locations

Target center locations must be measured to the center of the ten (10) ring.

6.4.6.1 Height of Target Centers

Target centers must be within the following heights when measured from the level of the firing point floor:

Range	Standard Height	Variation Allowable
300m	3.00 m	±4.00 m
50m	0.75 m	±0.50 m
25m	1.40 m	+0.10 m/-0.20 m
10 m	1.40 m	±0.05 m
50m Running Target	1.40 m	±0.20 m
10m Running Target	1.40 m	±0.05 m

All target centers within a group of targets or range must have the same height (±1 cm).

6.4.6.2 Horizontal Variations for Target Centers on 300m, 50m and 10m Rifle and Pistol Ranges

Target centers at 300m, 50m, and 10m must be oriented on the center of the corresponding firing point. Horizontal deviations from a center line drawn perpendicular (90 degrees) to the center of the firing point are:

Range	Maximum variation from center in either direction
300m	6.00 m
50m	0.75 m
10m	0.25 m

EDITION 2017 | Second Print 01/2018
Copyright: ISSF

6.4.6.3 **Horizontal Variations for Firing Points on 50m and 10m Running Target and 25m Pistol Ranges**

The center of the firing points must be located as follows:

a) For Rapid Fire ranges, according to the center of the group of five (5);

b) For Running Target ranges, according to the center of the opening; and

c) The center of the firing point must be oriented on the center of the corresponding target or opening. Maximum horizontal deviations from a centerline drawn perpendicular (90 degrees) to the center of the target or opening are:

Range	Maximum variation in either direction
25m	0.75 m
50m Running Target	2.00 m
10m Running Target	0.40 m

6.4.7 General Firing Point Standards for Rifle and Pistol Ranges

The firing point must be stable, rigid and constructed so that it does not vibrate or move. From the firing line to approximately 1.20 m rearward, the firing point must be level in all directions. The remainder of the firing point must either be level or may slope to the rear with a few centimeters drop.

6.4.7.1 If shooting is done from tables, the tables must be approximately 2.20 m long and 0.8 m to 1.00 m wide, rigid, stable and removable. **Shooting tables** may slope to the rear a maximum of 10 cm.

Copyright: ISSF

6.4.7.2 **Firing Point Equipment**. Firing points must be equipped with:

a) A bench or stand, 0.70 m – 1.00 m high; rifle athletes may not place any item or material on the table to change its height;

b) A mat for shooting in the prone and kneeling positions. Athletes must not alter shooting mats provided by the range. The front portion of the mat must be of a compressible material not more than 50 mm thick, and approximately 50 cm x 80 cm in size and measuring not less than 10 mm when compressed with the measuring device used to measure the thickness of Rifle clothing. The remainder of the mat must have a maximum thickness of 50 mm and a minimum thickness of 2 mm. The minimum overall size must be 80 cm x 200 cm. An alternative of two mats is permitted, one thick and one thin, but together they must not exceed the dimensions indicated. The use of private mats is prohibited;

c) A chair or stool for the athlete on Qualification ranges; no chairs or stools for athletes may be placed on or near the firing points on Finals ranges;

d) On new ranges, wind screens forward of the firing line are not recommended, but when necessary to ensure that wind conditions are as equal as possible throughout the range, wind screens may be used; and

e) When it is necessary to install dividing screens on the 300m firing line, they should be made of transparent material on a light frame. Screens should extend at least 50 cm forward of the firing line, and be approximately 2.00 m high.

6.4.8 Firing Point Standards for 300m Ranges

The size of the firing point must not be less than 1.60 m wide x 2.50 m long. The width of the firing point may be reduced only if any dividing screens are constructed so that an athlete in the prone position can place his left leg in an adjacent firing point without disturbing that athlete.

6.4.9 Firing Point Standards for 50m Ranges

a) The firing point must be a minimum of 1.25m wide x 2.50 m in length and

b) If the firing point is also used for 300m shooting, the firing point must be a minimum of 1.60 m wide.

EDITION 2017 | Second Print 01/2018
Copyright: ISSF

6.4.10 Range and Firing Point Standards for 10m Ranges

a) The firing point must be a minimum of 1.00 m wide;

b) The nearest edge of the bench or stand must be placed 10 cm forward of the 10m firing line; and

c) If the firing point is also used for 50m shooting, the firing point must be a minimum of 1.25 m wide.

6.4.11 Range and Firing Point Standards for 25m Pistol Ranges

6.4.11.1 Roofs and screens of 25m ranges must provide the athlete with adequate shelter from wind, rain, sun and ejected cartridge cases.

6.4.11.2 The firing point must be roofed or covered at a minimum height of 2.20 meter above the level of the firing point.

6.4.11.3 25m ranges must be divided into sections that are composed of two (2) groups of five (5) targets. Two (2) of five (5) targets are one bay.

6.4.11.4 In 25m events, athletes must be squadded with one athlete in each group of five (5) targets for the Rapid Fire Pistol event, and with four (4) (targets 1-2-4-5), three (3) (targets 1-3-5) or exceptionally five (5) (all targets) athletes in a group of five (5) targets for the 25m Pistol, 25m Center Fire Pistol and 25m Standard Pistol events.

6.4.11.5 25m ranges may be either open or divided by protected walkways. In open ranges, target officers move from the firing line area to the targets. Protected walkways, if used, must allow range staff to safely move to and from the target line. When protected walkways are used, a secure safety control system must be available.

6.4.11.6 Range Sections should be capable of being operated centrally and of being operated independently.

6.4.11.7 Firing point or shooting station dimensions must be:

Event	Width	Depth
25m Rapid Fire Pistol	1.50 m	1.50 m
25m Pistol 25m Center Fire Pistol 25m Standard Pistol	1.00 m	1.50 m

6.4.11.8 Firing points must be separated by small transparent screens that protect athletes from ejected cartridge cases and permit visibility of athletes by officials. The screens must be placed or hung next to the pistol locations and be large enough to prevent ejected cartridge cases from hitting other athletes. The screens must not obscure the officials' and spectators' views of the athletes.

Copyright: ISSF

6.4.11.9 45-degree reference lines should be placed on range walls or section dividers to the left or right of the firing points.

6.4.11.10 Each firing point must be provided with the following equipment:

a) A removable or adjustable bench or table, approximately 0.50 m x 0.60 m in size and 0.70 m to 1.00 m high;

b) In Qualification competitions, athletes may place items or support stands on a table to increase the table to a maximum height of 1.00 m;

c) In Finals competitions, pistol athletes may place an adjustable support stand (8.6.3) on the table provided the total table height with stand does not exceed 1.0 m; and

d) A chair or stool for the athlete on Qualification ranges; no chairs or stools for athletes may be placed on or near the firing points on Finals ranges;

6.4.11.11 **Function Firing Range**. A specially designated and supervised function firing range, without targets, must be provided for athletes to test guns.

6.4.12 Exposure Times for 25m Pistol Events are:

a) 25m Rapid Fire Pistol: 8, 6 and 4 seconds;

b) 25m Standard Pistol: 150, 20 and 10 seconds; and

c) 25m Pistol and 25m Center Fire Pistol Rapid Fire Stage: Facing for three (3) seconds for each shot, alternating with an edge-on face away time of seven (7) seconds (±0.1 second).

6.4.13 Standards for 25m Electronic Scoring Target Systems

When electronic scoring targets are used, the timing equipment must be set to add a total of 0.3 seconds to each established scoring time. This includes the established firing time +0.1 second (tolerance) plus an after-time of +0.2 second. The after-time ensures that shots that would have been valid skid-shots on paper turning targets, are scored according to the same standard on electronic targets. The green lights remain on for the required time +0.1 sec. and the electronic target must continue to record and score valid shots for an additional 0.2 sec. after-time.

EDITION 2017 | Second Print 01/2018
Copyright: ISSF

6.4.14 Indoor Range Light Requirements (Lux)

Type of Indoor Range	General Lighting Recommended Minimum	Target Lighting	
		Minimum	Recommended
10m	500	1500	>1800
10m RT	500	1000	>1000
25m	500	1500	>2500
50m	500	1500	>3000

Finals Ranges must have a minimum general lighting of 500 lux and minimum of 1000 lux on the firing line. For new ranges lighting of about 1500 lux on the firing line is recommended.

6.4.14.1 All indoor ranges must have artificial illumination providing the necessary amount of light without glare or distracting shadows on the targets or firing points. The background area behind the targets must be a non-reflecting, light even neutral color.

6.4.14.2 Measuring target illumination on targets with external lighting must be done with the measuring device held at the level of the target and pointed toward the firing point (A). Measuring target illumination on targets with internal lighting must be done by measuring reflected light from the target face.

6.4.14.3 Measuring general range illumination must be done with the measuring device held at the firing point (B1) and midway between the firing point and the target line (B2) with the device directed toward the ceiling illumination.

Indoor Range Light Measuring

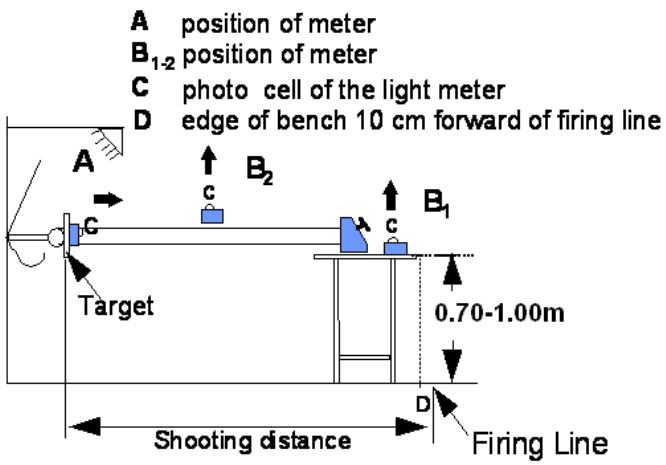

Copyright: ISSF

6.4.15 Standards for Running Target Ranges

6.4.15.1 The range must be so arranged that the target runs horizontally in both directions across an open area with a constant speed. This area, where the target may be fired upon, is called the “opening.” The movement of the target across the opening is called a “run.”

6.4.15.2 The protective walls on both sides of the opening must be of such a height that no part of the target is visible until it reaches the opening. The edges must be marked with a color differing from that of the target.

6.4.15.3 Targets for 50m are placed on a trolley or target carrier constructed so that the two targets (one running to the left and one to the right) can be alternately shown. The trolley may run on rails, cable, or a similar system and must be moved by a driving unit which can be regulated accurately for speed. Targets for 10m are not changed for left and right runs.

6.4.15.4 The shooting station must be arranged so that the athlete is visible to spectators. The shooting station must be protected from rain. The athlete should also be protected from sun and wind if this does not prevent spectators from seeing him.

6.4.15.5 The shooting station must be at least 1.00 m wide and aligned with a center-line perpendicular to the target. The dry firing position must be located to the left of the shooting station. The shooting station must be screened on both sides with separating partitions so the athlete is not disturbed by dry firing or other extraneous influences. The separating partition between the firing point and the dry firing point must not be longer than to allow the dry firing athlete to watch the READY position of the competition athlete by observing the muzzle movement of his rifle.

6.4.15.6 In front of the athlete there must be a bench or a table 0.70 m – 1.00 m high.

6.4.15.7 Behind the athlete there must be a place for the Range Officer and at least one member of the Jury. The Register Keepers must be located either behind or at the side of the shooting station.

6.4.15.8 Run times for the targets are:

Slow runs:	5.0 seconds, +0.2 seconds – 0.0 seconds
Fast runs:	2.5 seconds, +0.1 seconds – 0.0 seconds

Timing should preferably be done by using an electronic timer that is started and stopped by switches mounted on the rail. If this method cannot be used, timing may be done by using three (3) stop watches operated by three different persons. The middle (median) of the three (3) times must be counted. If the run time is found to be less or more than that specified, range personnel or the Jury must regulate the time to within the specified run time standards. If the timer is built into the starting control, the timing must be examined by the Jury and sealed.

EDITION 2017 | Second Print 01/2018
Copyright: ISSF

6.4.15.9 Timing must be electronically controlled and continually displayed for inspection by athletes and officials. Any deviation must be corrected immediately.

6.4.16 Running Target Ranges

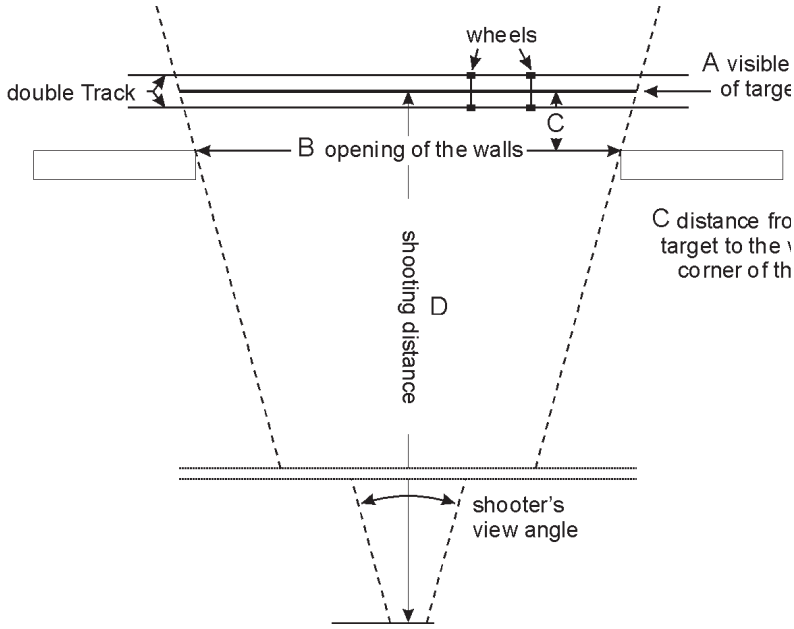

A	Visible length of target track
B	Opening of the wall between visible corners
C	Distance from the target to the visible corner of the wall
D	Shooting distance
Formula for determining the opening:	B = A x (D – C) / D
Example (50m): C= 0.20 m	B = 10.00 m x (50.00 m – 0.20 m) / 50.00 m B = 10.00 m x 49.80 / 50.00 = 10.00 m x 0.996 B = 9.96 m
Example (10m): C= 0.15 m	B = 2.00 m x (10.00 m – 0.15 m) / 10.00 m B = 2.00 m x 9.85 / 10.00 = 2.00 m x 0.985 B = 1.97 m

Copyright: ISSF

6.4.16.1 **Special Standards for 50m Running Target Ranges**

a) There must be a vertical wall on both sides of the opening for the protection of operating personnel and scorers;

b) There must be an embankment behind the opening. In front of the opening there must be a low wall to conceal and protect the target carrying mechanism; and

c) The visible length of the target track must be: **10.00 m (+0.05 m/-0.00 m)** as seen from the firing point. This must be considered when measuring the opening since the distance between the visible corner of the wall and the target increases the distance over which the target is visible.

d) Wind flags are not permitted for 50m Running Target.

6.4.16.2 **Standards for 10m Running Target Ranges**

a) If target changing and shot evaluation is done behind the target carrier, there must be sufficient protection for operating personnel and scorers. The target changing and evaluation must be supervised by a member of the Jury;

b) Behind the opening there must be a backstop to stop pellets and prevent ricochets. The target carrying mechanism must be protected by a front cover plate;

c) The visible length of the target track must be: **2.00 m (+0.01 m/-0.00 m)** as seen from the firing point. This must be considered when measuring the opening since the distance between the visible corner of the wall and the target increases the distance over which the target is visible;

d) Two shooting stations may be installed and used alternately, to save time. In this case, the two firing points must not deviate from the standards; and

e) When electronic scoring targets are used, the timing equipment must be set to give the nominal exposure times plus 0.1 second. This should ensure that the earlier appearance of the EST aiming mark is allowed for.

6.4.17 General Standards for Shotgun Venues

6.4.17.1 Shotgun venues in the Northern Hemisphere should be laid out so shooting is toward a north to north-easterly direction. Venues in the Southern Hemisphere should be laid out so shooting is toward a south to south-easterly direction. These arrangements place the sun to the back of the athlete and on the target as much as possible.

EDITION 2017 | Second Print 01/2018
Copyright: ISSF

6.4.17.2 Where necessary and feasible, new Shotgun venues must be constructed with a reasonably level shot fall zone that is free of obstacles to permit mechanical salvage and the recovery of lead pellets. Net systems may also be installed to capture lead pellets.

6.4.17.3 When Shotgun venues include more than one range, ranges must be identified, starting on the left, with letters (A, B, C, etc.) or numbers (1, 2, 3, etc.),.

6.4.18 Standards for Trap Ranges

6.4.18.1 The Trap Pit

The trap pit must be constructed so that the upper surface of the roof is on the same elevation as the surface of the shooting stations. Interior measurements of the trap pit should be approximately 20 m from end to end, 2.00 m from front to rear, and 2.00 m to 2.10 m from the floor to the under side of the roof. These dimensions will allow freedom of movement for working personnel and sufficient storage space for targets (see Figures).

6.4.18.2 Distances Between Trap Pits

The distance between the center of machine 15 on Range A and the center of the machine one (1) on Range B must not be less than 35 m. For pre-existing ranges with a distance less than 35 m, as specified above, the Jury may reduce the throwing angles of the settings of machine 13 of Range A, and machine three (3) of Range B, if necessary, to prevent those targets from crossing over into the target flight path of the adjoining range and disturbing those athletes.

Copyright: ISSF

6.4.18.3 **The Traps (Target Throwing Machines)**

Each trap pit must have 15 traps attached to the front wall of the pit. The traps must be divided into five (5) groups of three (3). The center of each group must be indicated only by a painted mark on the top of the roof which must be positioned so that it must indicate the point above the center trap of each group at which a target must emerge when set to throw at zero (0) degrees. The distance between traps within each group must be equal, from 1.00 m to 1.10 m. The distance between the center traps of adjacent groups should be 3.00 m to 3.30 m. For existing ranges this may be 3.00 m to 6.00 m.

a) In the case of use of machines with left-hand (clockwise) rotation of throwing arms the distance between the left side (viewed from behind) and the center machine in each group may be reduced to less than the prescribed 1.00 m to 1.10 m (see also Rule 6.4.19.3).

b) The traps must be installed in the pit so that the pivot point of the throwing arm is 0.50 m (±0.10 m) below the top surface of the roof of the trap pit and set back 0.50 m (±0.10 m) from the front edge of the roof when the trap is set at the 2 m elevation. This is defined as the Throwing Point. Traps may be fully automatic (self loading and cocking), semiautomatic (hand loaded and self cocking), or manual (hand loaded and cocked). Each trap must be provided with a means of sealing its elevation angle, and main spring tension after these have been inspected and approved by the Jury. All traps must be provided with a means of making target throwing settings on a precise setting. All traps which are hand loaded must have two stops fixed to them. The stops are necessary to prevent accidental or deliberate movement of the target forward or backward on the throwing arm, thus changing the preset directions of the target. Each trap must have the elevation and angle sectors marked in increments of 10 degrees.

c) The traps must be released by an electric-manual or electric-microphone system. The control system must be placed in such a position that the puller can clearly see and hear the call of the athlete. The release devices must guarantee equal distribution of targets to each athlete in a series of 25 targets. This distribution must be: ten (10) targets to the right, ten (10) targets to the left and five (5) targets to the center. With the correct distribution, in a series of 25 targets, each group of traps must throw two (2) targets from the left trap, two (2) from the right trap and one (1) from the center trap as the athletes progress from station 1 to 5. After every five (5) targets the selector index must be advanced one step.

d) The five (5) shooting stations must be arranged on a straight line at a distance 15 m to the rear of the front edge of the trap pit. Each station must be prominently marked with a square 1.00 m x 1.00 m which is centered on a line perpendicular to the line of shooting stations and extending through the painted mark which indicates the zero (0) degree exit point above the middle

EDITION 2017 | Second Print 01/2018
Copyright: ISSF

machine in each group of three. A sixth station must be marked about 2.00 m to the rear and slightly to the left of Station 1 where athlete number 6 may take his position. All six (6) shooting stations must have a table or bench where the athletes may place their extra cartridges and other equipment. The stations must be firm and level in all directions. Each station must have at the front right and left hand corners a block of wood, piece of carpet or rubber about 15 cm square or round upon which the athlete may rest his gun.

e) For Trap Finals, medium intensity colored lamps must be fitted to each microphone stand at a height of 40 cm to 75 cm to indicate when the microphone is live. The lamp system must be constructed to indicate a pause (microphone dead) of 5-25 seconds after each athlete has shot at a pre-determinded number of targets. At the end of the pause, the Referee must command **"READY"** and the athlete next to shoot must have a further 12 sec. preparation time to call for the target.

f) 3.00 m to 4.00 m behind the line of shooting stations a path must be provided for mandatory use by the athletes moving from station 5 to station 6. Athletes must not pass between the path and the shooting stations. A wire, rope or other suitable barrier is to be erected 7.00 m to 10.00 m behind the return walkway. No spectators are to be allowed within this barrier. The Referee and Jury Members are responsible for enforcing this rule. The shooting stations, Referee stand and operator stand should have adequate protection from sun and rain, except that Finals ranges should, if possible, be open.

Copyright: ISSF

6.4.18.4 **Trap Range**

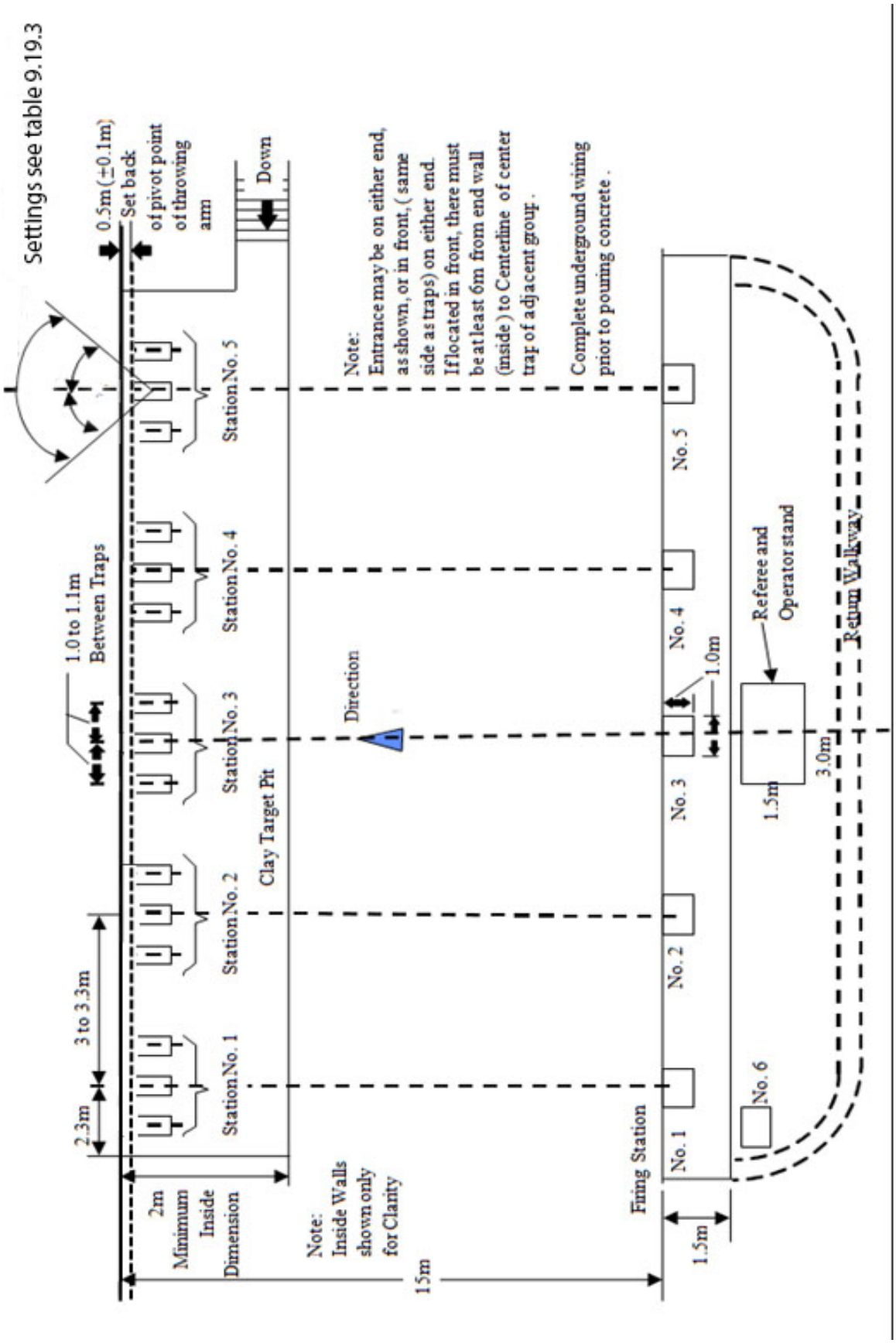

EDITION 2017 | Second Print 01/2018
Copyright: ISSF

6.4.18.5 Trap and Double Trap pit section

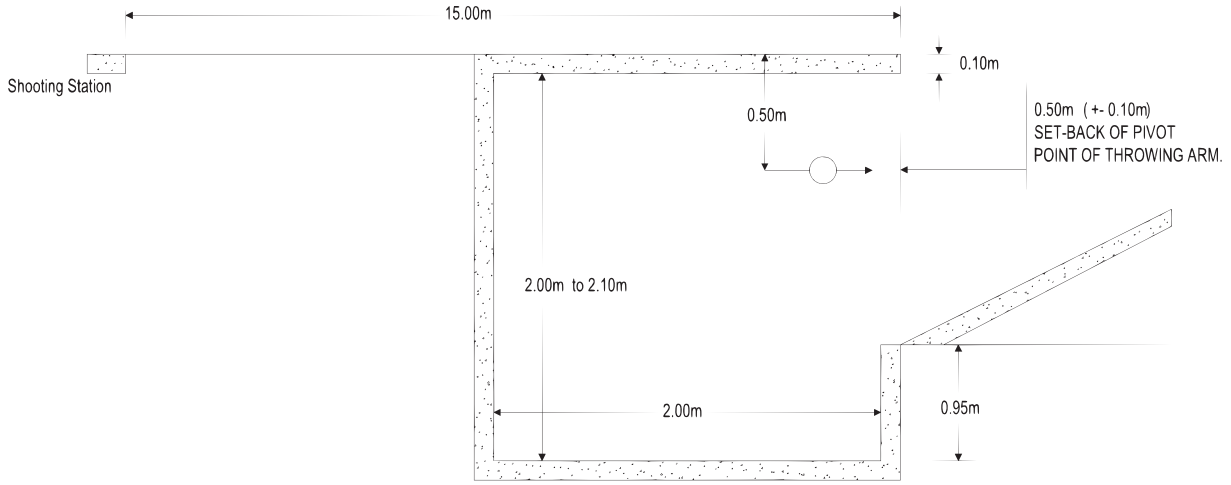

6.4.19 Standards for Double Trap Ranges

6.4.19.1 The Trap Pit

Trap ranges are most commonly adapted to Double Trap competition by using the center group of traps, numbers 7, 8 and 9, directly in front of Station 3. See Double Trap Rules.

6.4.19.2 Distances between Trap Pits

See Rule 6.4.18.2 when trap pits are used. When separate double trap pits are constructed, the distance from the center machine on one field to the center machine on the adjoining field should not be less than 35.00 m. (The angles of targets in Double Trap are not so wide as in Trap therefore reductions are possible.)

Copyright: ISSF

6.4.19.3 **Traps for Double Trap (target throwing machines)**

Each double trap pit must have three (3) traps attached to the front wall of the pit. The zero (0) degree exit point of the center trap of the group must be indicated only by a painted mark on the top side of the pit roof. The distance between traps within the group must be equal, from 1.00 m to 1.10 m (see Rule 6.4.18.3). Traps number 1 and number 3 should be a minimum of 1.50 m from the end walls.

a) The traps must be installed in the pit so that the pivot point of the throwing arm is 0.50 m (±0.10 m) below the top surface of the roof of the trap house and set back 0.50 m (±0.10 m) from the front edge of the roof when the trap is set at the 2.00 m elevation (see Figures). Traps may be fully automatic (self loading and cocking), semiautomatic (hand loaded and self cocking), or manual (hand loaded and cocked). Each trap must be provided with a means of sealing its elevation, angle, and main spring tension after these have been inspected and approved by the Jury. All traps must be provided with a means of allowing target throwing on a precise setting. All traps which are hand loaded must have two stops fixed to them. The stops are necessary to prevent accidental or deliberate movement of the target forward or backward on the throwing arm, thus changing the preset directions of the target. Each trap must have the elevation and angle sectors marked in increments of 10 degrees.

b) The traps must be released by an electric-manual or electric-microphone system. If a manual control system is used it must be placed in such a position that the puller can clearly see and hear the call of the athlete. For all ISSF Championships an automatic release device must be used which must be set to simultaneously release the targets immediately after the athletes call. Where an electric-manual system is used, the release device must be designed so that only one (1) button or switch can be used to release the targets.

c) The five (5) shooting stations must be arranged on a straight line at a distance of 15 m to the rear and parallel to the front edge of the trap pit. Each station must be prominently marked with a square 1.00 m x 1.00 m. Station 3 must be centered on a line extending through the painted mark that indicates the zero (2) degree exit point above the middle trap in the group. Station 2 is 3.00 m – 3.30 m to the left of Station 3 and Station 1 is equidistant to the left of Station 2. Likewise Station 4 is 3.00 m – 3.30 m to the right of Station 3 and Station 5 equally 3.00 m – 3.30 m to the right of Station 4 (see Figure, Separate Double Trap range). A sixth Station must also be marked about 2 m to the rear and slightly to the left of station 1 where athlete number 6 may take his position at the start of the competition. All six (6) of the shooting stations must be furnished with a table or bench where the athletes may place their extra cartridges and equipment. The stations must be firm and level in all directions and must be at the same elevation as the front edge of the roof of the trap pit. Each station (six) must also have a block of wood, piece of carpet or thick rubber sheet about 15 cm square or round upon which an athlete may rest his gun.

EDITION 2017 | Second Print 01/2018
Copyright: ISSF

d) 3.00 m to 4.00 m behind the line of shooting stations a path must be provided for mandatory use by the athletes moving from station 5 to station 6. Athletes must not pass between the path and the shooting stations. A wire, rope or other suitable barrier is to be erected 7.00 m to 10.00 m behind the return walkway. No spectators are to be allowed within this barrier. The Referee and Jury Members are responsible for enforcing this rule. The shooting stations, Referee stand and operator stand should have adequate protection from sun and rain, except that Finals ranges should, if possible, be open.

Copyright: ISSF

6.4.19.4 **Separate Double Trap Range – 3 Machine**

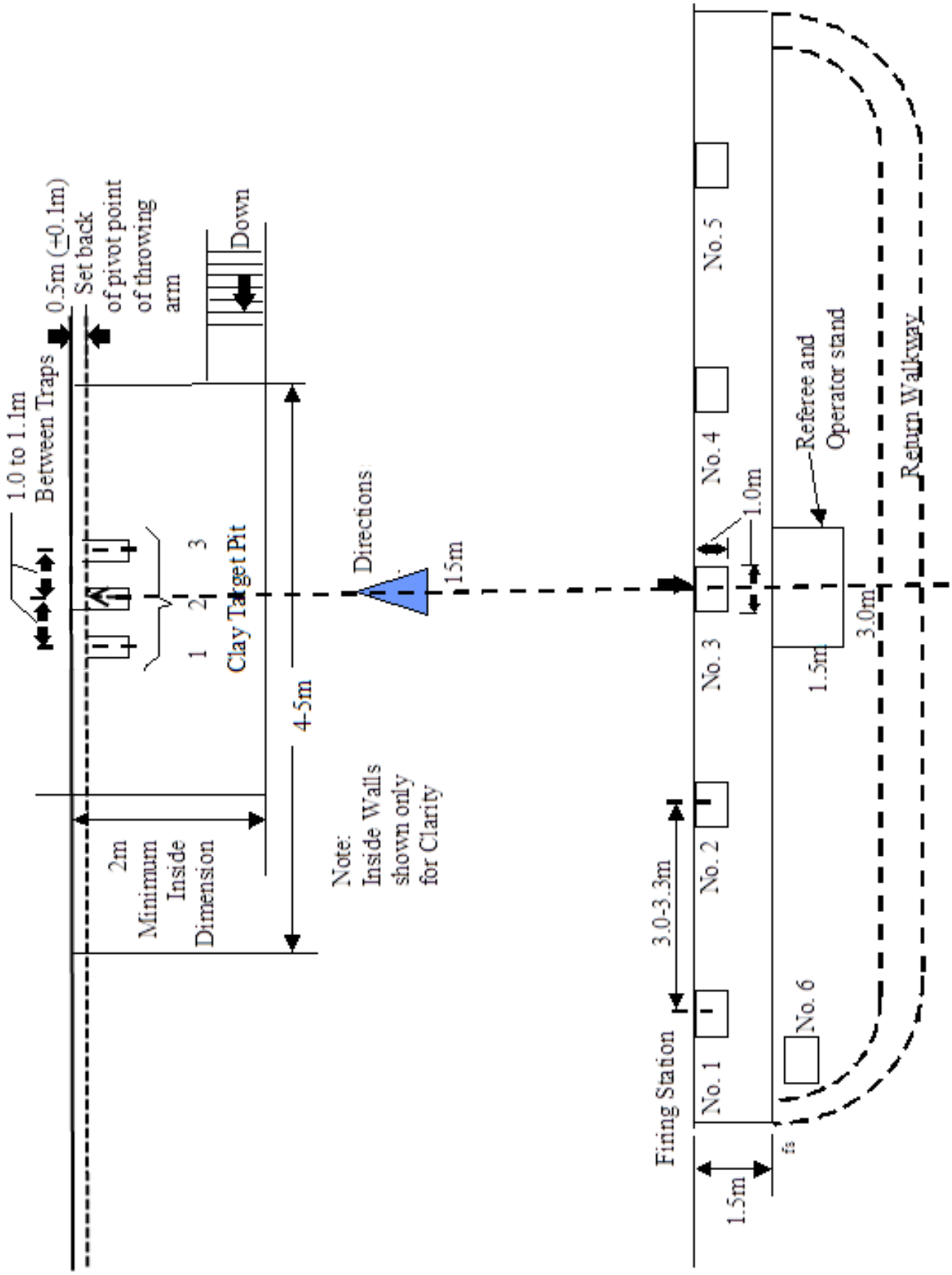

EDITION 2017 | Second Print 01/2018
Copyright: ISSF

6.4.20 Standards for Skeet Ranges

6.4.20.1 A Skeet field consists of two houses (high house and low house) and eight (8) shooting stations. Stations 1 through 7 are arranged on a segment of a circle with a 19.20 m radius and a base chord of 36.80 m (with a tolerance of ±0.25 m) which is 5.50 m from the center point of the circle which is marked by a stake.

a) The center of the circle which is marked by a stake also marks the base of the target crossing point.

b) Station 1 is located at the left end of the base chord and station 7 at the right end when standing anywhere on the segment of the circle and facing the center stake. Stations 2 through 6 are located on the segment of the circle at points equidistant from each other (the distance between the center of the front of the stations 1 and 2, 2 and 3, etc., is 8.13 m ±0.05 m on chord). Stations 8 and 4 are located at the center of the base chord (see Figure).

c) Shooting stations 1 through 7 are 0.90 m ±0.05 m x 0.90 m ±0.05 m square, with two sides parallel to a radius of the circle drawn through the station marker (center of the station). Shooting station 8 is rectangular, 0.9 m ±0.05 m wide by 1.85 m ±0.05 m long, with its long sides parallel to the base chord. The location of each shooting station must be accurately indicated. The markers for shooting stations 1 through 7 are on the center of the side nearest the target crossing point. The marker for shooting station 8 is on the center point of the base chord. All eight (8) shooting stations must be on the same level, within ±0.05 m difference in elevation.

Copyright: ISSF

6.4.20.2 **Target Distances, Angles and Elevations**

a) Each house must contain a clay target throwing machine in a fixed position. The throwing arm of the target throwing machine in the high house, when in a horizontal position, should be 2.80 m ±0.10 m above the level of station 1 and the throwing arm in the low house should be 0.80 m ±0.10 m above the level of station 7.

b) Targets thrown from the high house must emerge at a point 0.90 m ±0.05 m behind the station marker 1 (measured along the extended base chord) and 3.05 m ±0.05 m. Targets thrown from the low house must emerge at a point 0.9 m ±0.05 m behind station marker 7 (measured along the extended base chord) (moved 0.75 m ±0.05 m to the exterior of the base chord) and 1.05 m ±0.05 m above the level of station 7.

c) Targets properly released must pass through a circle 0.90 m - 0.95 m in diameter, located 4.60 m ±0.05 m above the center point.

d) In calm weather conditions targets must carry a distance of 68.00 m ±1.00 m as measured from the face of the house behind stations 1 and 7. If the correct distance cannot be verified by measurement, the Jury will decide the trajectory of the targets.

e) The shooting boundaries of stations 1 to 7 are 40.30 m ±0.10 m from the face of each house. For station 8 the shooting boundary is determined by the crossing point between a straight line running from station 4 to station 8 and the target crossing point. Suitable markers must be placed on the target flight path, at points 40.30 m ±0.1 m from both the high house and the low house, to indicate the shooting boundaries. Similar markers must be placed at 67.00 m and 69.00 m to indicate the distance a regular target must fly. The tops of these distance markers should indicate the ground level.

f) A safety shield must be installed at the opening of each trap house so that the trap operator is not visible to an athlete on any station. This precaution is mandatory as a safety measure to protect the operator from possible injury from direct or ricocheting shot, and the athletes from broken targets emerging from the opening of the trap house. A wire, rope or other suitable barrier is to be erected 7.00 m to 10.00 m behind Station 4 and parallel to the base chord. No spectators are allowed within this barrier. The Referee and Jury Members are responsible for enforcing this Rule.

g) The traps must be released by an electric-manual or electric-microphone system (see note below) with a timer device which must be installed so as to allow the operator to see and hear the athletes. For all ISSF Championships the use of a timer is mandatory. This must provide for the release of the targets within an indefinite period of time, varying from instant release up to a maximum of three (3) seconds after the athlete has called for his target. The

EDITION 2017 | Second Print 01/2018
Copyright: ISSF

release device must be designed so that only one (1) button (or switch) can be used to release double targets.

h) Note: If an electro-microphone system is to be used, it must be so constructed as to randomly insert a delay varying from 0.2 to 3.0 seconds.

i) A colored lamp must be fitted to the outside of both high and low houses. The lamps must light immediately on the athlete's call and extinguish when the target(s) are thrown. The lamps must be clearly visible to the Referee. The lamp must be installed on the side of the skeet house which faces the spectator area at a height of 2.20 m – 2.80 m on the high house and 1.60 m – 2.00 m on the low house.

Copyright: ISSF

6.4.20.3 **Skeet Range Layout**

All new Skeet ranges must comply with these specifications. Skeet ranges constructed before 2013 with stations 1 and 7 facing the opposite target house will continue to be accepted for ISSF Championships.

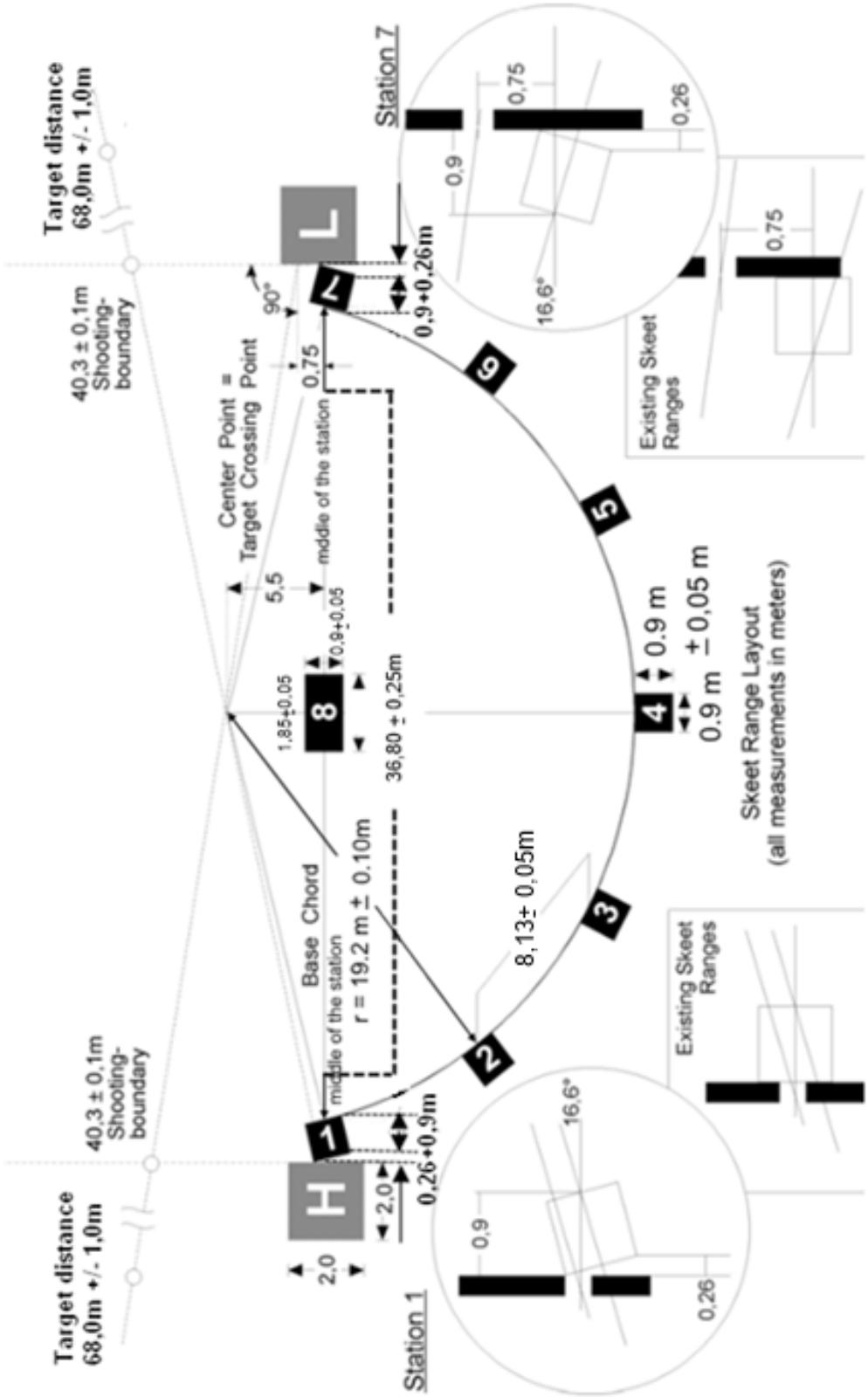

EDITION 2017 | Second Print 01/2018
Copyright: ISSF

6.4.20.4 **Skeet Range View**

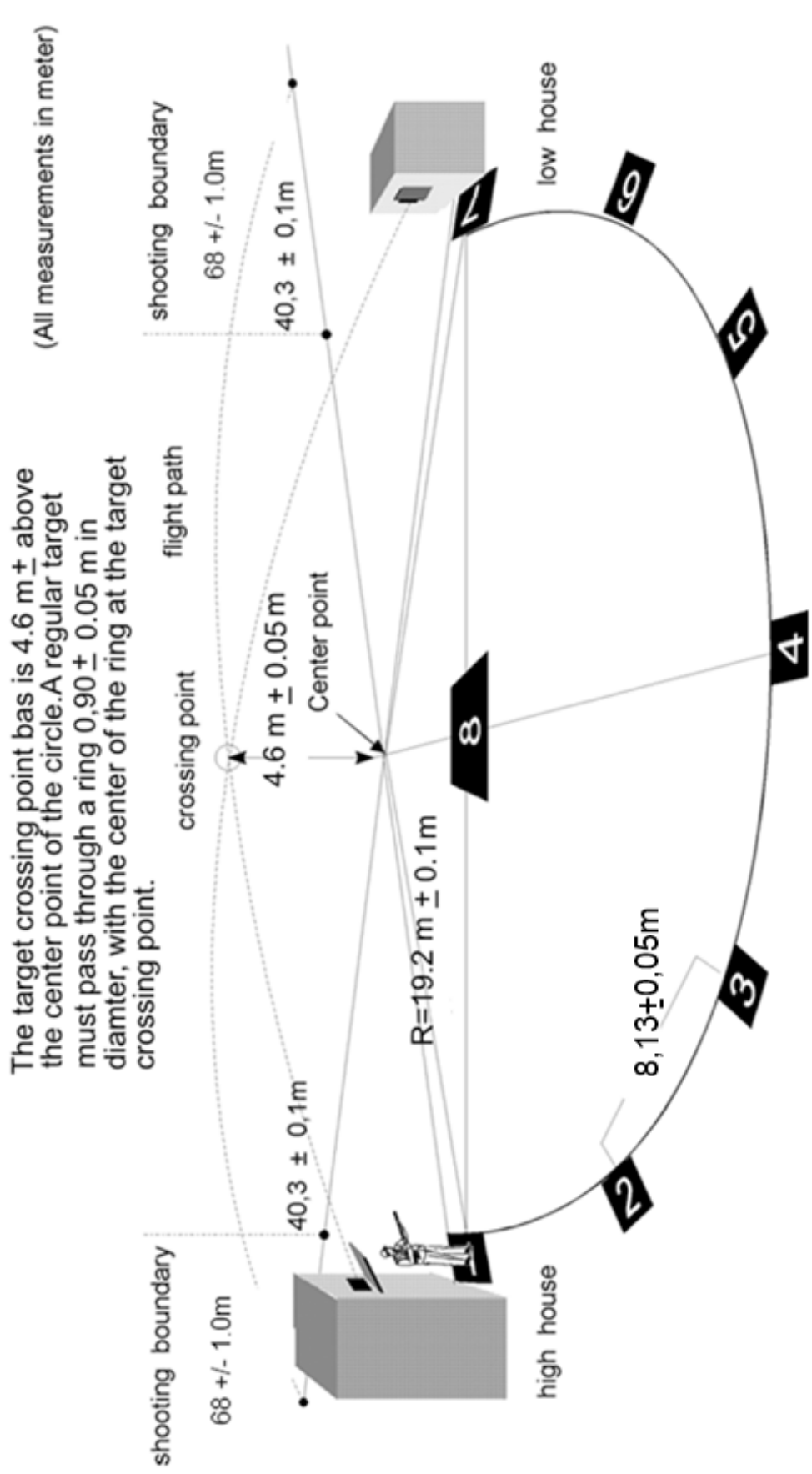

Copyright: ISSF

6.5 GAUGES AND INSTRUMENTS

a) Each Organizing Committee must provide a complete set of gauges and instruments for Equipment Control during ISSF Championships;

b) A detailed list of Equipment Control Instruments that are required for conducting Equipment Control tests and the requirements and specifications for those instruments is available from ISSF Headquarters;

c) The ISSF Technical Delegate or the Chairman of the Equipment Control Jury must examine and approve all gauges and instruments prior to the competition;

d) Calibration test equipment for use in examining Equipment Control instruments is available from ISSF Headquarters and must be used to calibrate testing instruments before each day of testing and when a disqualification is considered during post-competition testing (Calibration Report Forms are available from ISSF Headquarters); and

e) The measuring devices used to test the thickness, stiffness and flexibility of athletes' clothing must be constructed according to this rule (see Rule 6.5.1 below) and be approved by the ISSF Technical Committee.

6.5.1 Thickness Measurement Device

The device used to measure the thickness of clothing and shoes must be capable of measuring to one-tenth of a millimeter (0.1 mm). Measurements must be taken with a 5.0 kg weight applied. The device must have two (2) circular flat surfaces facing each other, each 30 mm in diameter.

EDITION 2017 | Second Print 01/2018
Copyright: ISSF

6.5.2 Stiffness Measurement Device

The device used to measure the clothing stiffness must be capable of measuring to one tenth of a millimeter (0.1 mm) and have the following dimensions:

A	Measuring cylinder	=	60 mm diameter
B	Measuring weight	=	1000 g (including grip and measuring plate C)
C	Measuring plate	=	20 mm diameter
D	Digital display		indicating 0.1 mm
E	The rounding of the edges on the measuring plate (C) and measuring cylinder (A) must not be more than 0.5 mm radius as a maximum.		

- Stiffness measurements must be made with the fabric/material laid flat, without stretching, on measuring cylinder “A;” and
- Measuring weight "B" presses measuring plate "C" onto the fabric/material on measuring cylinder "A.”

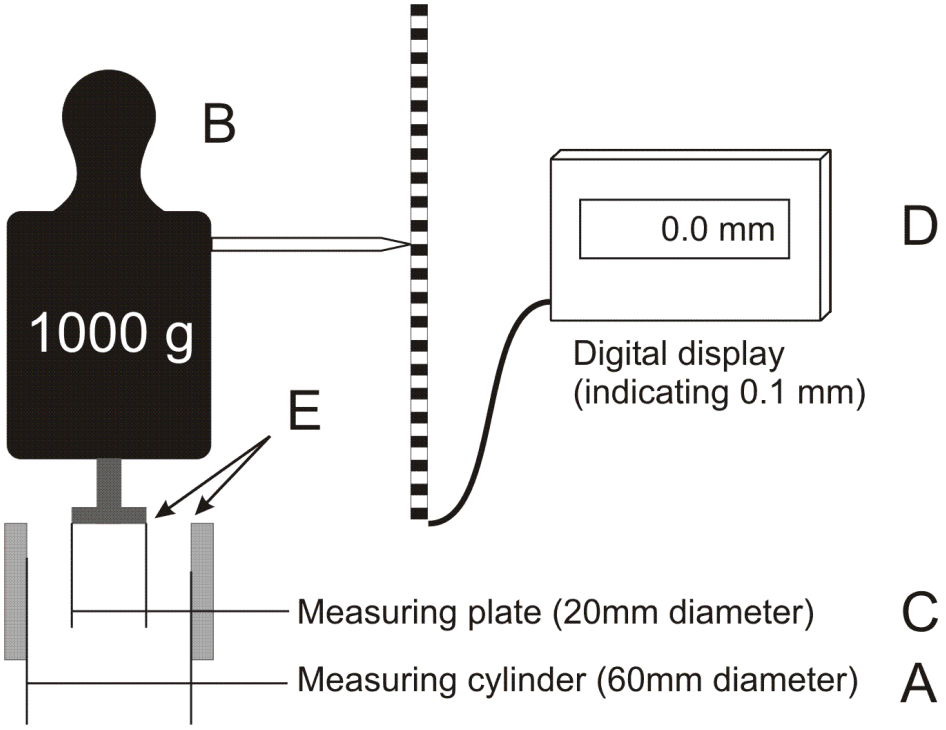

Copyright: ISSF

6.5.3 Shoe Sole Flexibility Measurement Device

The device used to measure shoe sole flexibility must be capable of accurately measuring, in degrees, the shoe sole flexibility under a precise amount of upward pressure (NM).

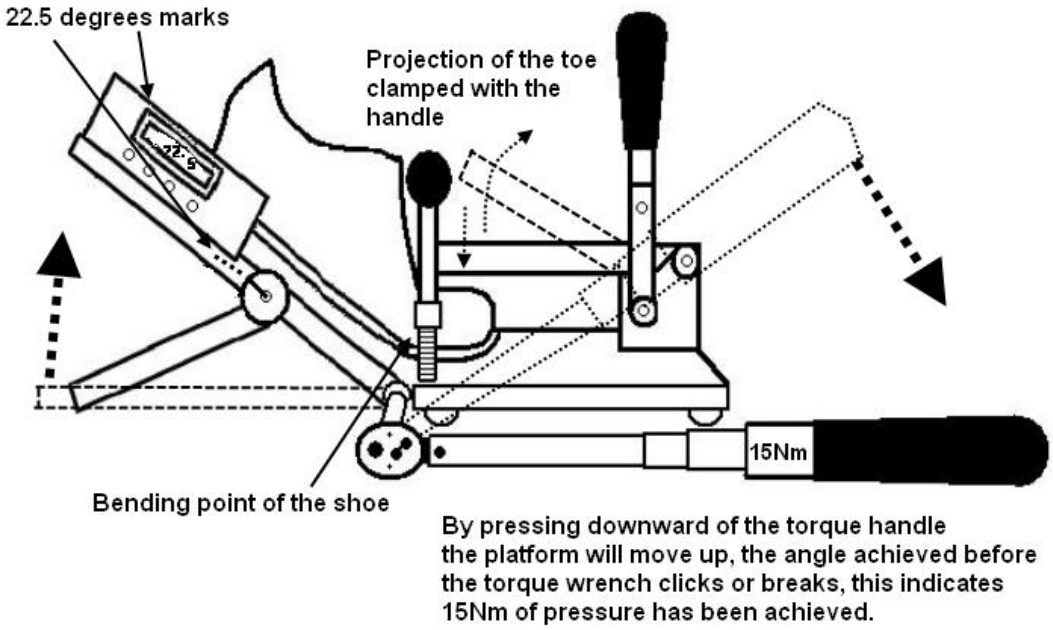

6.6 CHAMPIONSHIP ADMINISTRATION

6.6.1 Championship Program and Schedule

The administration of ISSF Championships shall be carried out in accordance with this Rule, except that the administration of Olympic and Continental Games Shooting Championships shall be carried out in accordance with the charter and regulations of the IOC or the appropriate Continental NOC organization.

EDITION 2017 | Second Print 01/2018
Copyright: ISSF

6.6.1.1 **Official Championship Program**. The office of the ISSF Secretary General will provide a standardized Championship Program and coordinate the preparation of an **Official Championship Program** with each Organizing Committee to be finalized at the time of the annual ISSF Workshop for Organizers in November of the year before the Championship. The **Official Championship Program,** including invitations, schedules, the official symbol or logo and entry forms will be posted on the ISSF website and the Organizing Committee must publish the **Official Program** and send it to all ISSF Member Federations as soon as possible after it is finalized.

6.6.1.2 **Official Schedule**. The office of the ISSF Secretary General, the Organizing Committee and the Technical Delegate appointed for the Championship must prepare a detailed **Official Schedule** for each Championship. Championship schedules should include an official arrival day, at least one day of Official Training, the necessary competition days and an official departure day. World Championship schedules, including Official Training days and the opening and closing ceremonies, should not exceed 16 days. Ranges may be open for additional Unofficial Training before the Official Training day at the option of the Organizing Committee. **Official Schedules** must provide dates and times for Official Training, Pre-Event Training, Elimination Relays, Qualification Relays, Finals Reporting Times, Finals and Victory Ceremonies. They must be published on the ISSF website as soon as possible after the annual ISSF Workshop for Organizers in November of the year before the Championship. Schedule changes, as approved by the Technical Delegate, must be made as soon as possible after the Final Entry Deadline and distributed to all participating delegations.

6.6.1.3 **Entry Status and Limits**. National Federations may enter a maximum of three athletes per nation per event who are competing for awards (in-competition) in ISSF Championship events. In addition, World Cups may, at the option of the Organizing Committee, accept a maximum of two additional athlete entries per nation per event that may compete for Olympic MQS status (MQS only) or participate out-of-competition (OOC).

6.6.1.4 **Maximum Entry**. The Organizing Committee and Technical Delegate must establish the **Maximum Entry** (range capacity) for each event on the program. Final entries that exceed the maximum entry for an event will be placed on a waiting list and will only be accepted if entry spaces become available before the Late Entry Deadline.

6.6.2 Technical Meeting

A Technical Meeting conducted by the Competition Director and Technical Delegate(s) must be scheduled on the day before the first competition day to inform team leaders about competition details and any schedule changes.

Copyright: ISSF

6.6.3 Training

6.6.3.1 **Official Training.** For World Cups, one full day of Official Training must be scheduled on the day following the official arrival day.

6.6.3.2 **Pre-Event Training (PET).** Pre-Event Training must be provided for every individual event on the program on the day before Elimination or Qualification competition for that event starts. If Mixed Team events follow comparable individual events, Pre-Event Training with open target allocations may be scheduled for these events when time is available in the schedule. For Rifle, Pistol and Running Target individual events, each athlete must be allowed to train on his allocated competition target for a minimum of 40 minutes per relay (30 minutes per relay for Rapid Fire Pistol, 15 minutes per athlete for Running Target) on a day before the event. This is in addition to the Official Training day(s) in the program (for Shotgun, see Rule 9.6.2.1).

6.6.3.3 **Unofficial Training.** In addition to Official Training and scheduled Pre-Event Training, athletes should be given additional Unofficial Training opportunities when the shooting ranges are available.

6.6.4 Entries and Entry Confirmation

National Federations must submit entries to the ISSF Online Registration Service by the Final Entry Deadline 30 days before the official arrival day (Rule 3.7.3.2).

a) Late Entries may be submitted until three days before the official arrival day if an additional penalty is paid and entry spaces are available (Rule 3.7.3.4);

b) Entry Confirmations and the payment of applicable entry fees to the Organizing Committee must be completed by team leaders upon arrival (Rule 3.7.4); and

c) **Entry Changes** can only be made in accordance with Rule 3.7.3. Entry Changes must be completed not later than 12:00 hours on the day before the Pre-Event Training for a particular event.

EDITION 2017 | Second Print 01/2018
Copyright: ISSF

6.6.5 Start Lists

a) Start lists with firing point and relay allocations must be published and distributed not later than 16:00 hrs on the day before Pre-Event Training for Rifle-Pistol events and the day of Pre-Event Training for Shotgun events;

b) **Sustainability option**: If the organizer provides a comprehensive email distribution system or a wireless internet system that is generally available throughout the venue, and a public access information station, the organizer may, with the approval of the Technical Delegate, use a paperless system where printed start lists are not distributed; and

c) **Substitutions.** An athlete, in a team event only, may be replaced by an already registered athlete not later than 30 min. before the scheduled start time for that event. This rule also applies for competitions composed of several parts or carried out over several days.

6.6.6 Principles for Firing Point Allocation

a) The random allocation of athletes to firing points and relays must be done under the supervision of the Technical Delegate with a computer program designed for this purpose or by the drawing of lots;

b) Whenever draws are used to determine firing positions the Technical Delegate must approve the range constraints to be taken into account; the Technical Delegate may approve the squadding of MQS-only athletes in specific sections of a range.

c) Individual athletes and teams (nations) should be able to shoot under conditions that are as nearly equal as possible;

d) Athletes from the same nation should not be allocated adjacent firing positions;

e) Athletes from the same nation should be divided as equally as possible between relays;

f) If there are more athletes than targets in Air Rifle or Air Pistol events, targets must be distributed by drawing lots for two (2) or more relays;

g) If more than one relay is used in team competitions, team members must be distributed equally between the relays;

h) If a Rifle competition lasts for more than one day, all athletes must fire an equal number of shots in the same position or positions each day; and

i) When a Pistol event is divided into two (2) stages or days, all athletes must finish the first stage before the second stage or day may begin. All athletes must fire an equal number of series on each day of a two-day competition.

Copyright: ISSF

6.6.6.1 Elimination Events for Outdoor 50m and 300m Ranges

If the number of athletes exceeds the useable capacity of the range, an Elimination must be conducted, except that in Junior World Cups this requirement may be waived by the Technical Delegate when required by schedule limitations.

a) Any Elimination must be over the complete course of fire;

b) Elimination relays should be scheduled on the day before the Qualificaton is scheduled;

c) Qualification athletes must consist of a proportionate number of highest ranking athletes from each Elimination relay, taking the number of starts on the startlists into account. The number of athletes who qualify must be announced as soon as possible;

d) **Formula:** The usable number of firing points is divided by the total number of athletes on the startlists multiplied by the number of athletes on the startlist for each relay to give the number of athletes going forward from the Elimination to the Qualification, e.g. 60 firing points and 101 athletes:

1st relay:54 athletes = 32.08 ® 32 athletes forward;

2nd relay: 47 athletes = 27.92 ® 28 athletes forward;

e) When Eliminations are required for team events, team members/nations must be equally divided between the Elimination relays. Team scores are taken from these relays;

f) If insufficient targets are available to allocate two team members from each team to the first relay and the remaining member from each team to the second relay, then it will be necessary to have three relays with one member from each team on each relay;

g) An athlete who does not qualify must not be allowed to participate further in the event; and

h) If there are tied scores for the last places in an Elimination the order of rank will be determined according to tie breaking rules.

i) If an Elimination is not scheduled in Junior World Cups and multiple relays are scheduled, Team Leaders must be allowed to designate their athletes who will be squadded on the first and subsequent relays.

EDITION 2017 | Second Print 01/2018
Copyright: ISSF

6.6.6.2 **Schedules and Squadding – 25m Rapid Fire Pistol Men**

a) The second 30-shot stage must begin only after all athletes complete the first 30-shot stage. If there are fewer athletes than are necessary to completely fill all relays, the allocation of firing points should be done so that gaps are left in the last relays of the first and second stages;

b) For the 2nd stage, firing point allocation will be in order of ranking according to scores fired in the first 30-shot stage, with the lowest ranked athletes shooting in the first relay. Start positions within each relay will be decided by a random draw.

6.6.6.3 **Schedules and Squadding -- 25m Pistol Women**

The event may be scheduled to take place on one or two days. If possible, the event should be scheduled to take place on two days with the rapid-fire stage and Final taking place on the second day. If the event is scheduled over two days, the PET before the first day should be for the precision stage. There should be a second PET on the first competition day, after the precision stage, for the rapid-fire stage.

6.6.6.4 **Shotgun** squadding and draw rules are found in Rule 9.11.4.

6.6.6.5 **Running Target** squadding and draw rules are found in Rule 10.7.3.1.

6.7 COMPETITION CLOTHING AND EQUIPMENT

6.7.1 The ISSF establishes specific standards for competition clothing and equipment that athletes may use in ISSF Championships and for Equipment Control testing to check those standards in order to safeguard the principles of equal and ethical competition where no athlete can gain an unfair advantage over other athletes.

6.7.2 Athletes are responsible for ensuring that all items of equipment and clothing used by them in ISSF Championships comply with ISSF Rules.

6.7.3 All athletes' equipment is subject to checks by the Equipment Control Jury and an Equipment Control Section established by the Organizing Committee as well as by the respective Competition Juries.

6.7.4 Standards for Clothing and Equipment

6.7.4.1 Rules governing specific equipment used by athletes in a particular discipline are found in the Rules for that discipline.

6.7.4.2 The use of any special devices, means or clothing, including the use of Kinesio, medical or similar taping, which immobilizes or unduly reduces the movement of the athlete's legs, body or arms, is prohibited for Rifle, Pistol and Running Target athletes in order to ensure that athletes' performance skills are not artificially improved.

Copyright: ISSF

6.7.4.3 Radios, iPods, or any similar type of sound producing or communication systems are prohibited on the FOP during competition and training, except when they are used by competition officials.

6.7.4.4 Mobile phones or other hand-held communication devices (i. e. tablets, etc.), electronic devices or wrist-worn devices (i. e. smart watches) may not be used by athletes on the firing line.

6.7.5 ISSF Dress Code

It is the responsibility of athletes, coaches and officials to appear on the ranges dressed in a manner appropriate for a public sports event. Clothing worn by athletes and officials must comply with the ***ISSF Dress Code***. See 6.20 for the full ***ISSF Dress Code.***

6.7.6 Equipment Control

6.7.6.1 The Organizing Committee must establish an Equipment Control Section to perform equipment control checks under the supervision of the Equipment Control Jury. An Equipment Control checking service must be available to all athletes so that they may have their equipment checked prior to the competitions. To ensure compliance with ISSF Rules, the Equipment Control Jury and Equipment Control Section must conduct random post-competition testing (6.7.9).

EDITION 2017 | Second Print 01/2018
Copyright: ISSF

6.7.6.2 **Equipment Control Procedures**

a) The Organizing Committee must inform team officials and athletes where and when they may have their equipment inspected prior to or during the competitions;

b) The Equipment Control Section must be open to provide voluntary inspections for athletes' equipment, starting with the Official Training day and continuing through the last day of Rifle-Pistol-Running Target competition;

c) ISSF calibration test equipment must be used to check testing instruments before each day of testing and when a disqualification is considered during post-competition testing;

d) Athletes are encouraged to bring any items of equipment to the Equipment Control Section for checking if they are not certain if they will pass a post-competition check;

e) The Equipment Control Section must ensure that all Rifle shooting jackets and shooting trousers are identified with a seal bearing a unique serial number that is registered to the athlete. The seal must be designed so that it cannot be removed without breaking the seal. Seals previously issued for one-time-only clothing inspections (2013 and prior) fulfill this requirement. Jackets and trousers with no seal must be checked for compliance with ISSF Rules and have seals affixed to them that are registered for the athlete. The Equipment Control and Rifle Juries will use the jacket and trouser seals to conduct random checks for compliance with Rule 7.5.1.2;

f) The Equipment Control Section must keep a register of the guns, shooting jacket and trousers that they check, with the name of the athlete, the make (manufacturer), serial number and caliber of each gun checked on an Equipment Control-Card;

g) It is the athlete's responsibility that any air or CO_2 cylinder is within manufacturer's validity date (maximum of ten (10) years); this may be checked by Equipment Control and advisory recommendations may be given;

h) One copy of the Equipment Control Card is given to the athlete who must retain this card with his equipment at all times. If an athlete loses his Equipment Control Card, there is a EUR 10.00 fee to replace it; and

i) If a Rifle clothing item is resubmitted for a second or subsequent test during the same Championship, a reinspection fee of EUR 20,00 will apply.

Copyright: ISSF

6.7.7 Bib (Start) Numbers and Items Worn by Athletes

6.7.7.1 All athletes must be provided with a Bib Number (Start Number) to wear on the back of the outer garment above the waistline during the entire competition. Bib Numbers must display the athlete's allocated number for that Championship, family name, initial and nation (IOC abbreviation only). If a flag of the nation is used, it must be placed to the left of the IOC abbreviation. The height of the letters in names should be as big as possible, but no letters or numbers may be less than 20 mm (for Shotgun, see 9.13.2, 9.13.3).

6.7.7.2 **Bib Numbers** must be worn by all athletes, on their backs and above the waist, at all times while participating in Pre-Event Training and competition. If the Bib Number is available and not worn, the athlete may not compete.

6.7.7.3 All athletes must comply with **ISSF Eligibility, ISSF Commercial Rights and ISSF Sponsorship/Advertising Rules**. These rules govern such matters as emblems, sponsorship, advertising and commercial markings on clothing together with controls and sanctions.

6.7.8 Blinders

6.7.8.1 **Side Blinders** (on one or both sides) attached to the hat, cap, shooting glasses, or to a headband, not exceeding 60 mm deep are permitted for Shotgun athletes only (Rule 9.13.4) (A). The front edge of a side blinder, when viewed from the side, must not extend more than 30 mm forward of the center point of the forehead. Side blinders must be made of plastic material only.

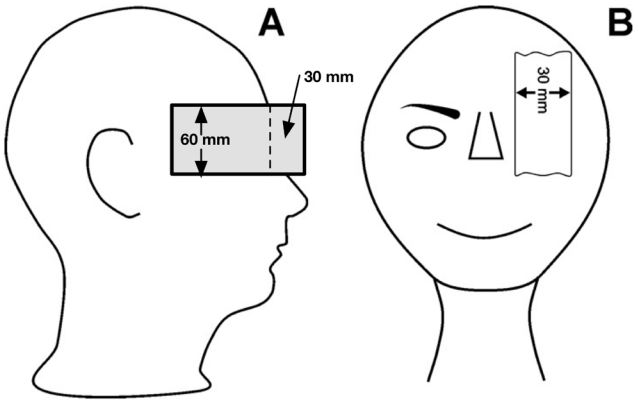

6.7.8.2 **One Front Blinder** to cover the non-aiming eye that is not more than 30 mm wide is permitted for all athletes (B).

EDITION 2017 | Second Print 01/2018
Copyright: ISSF

6.7.9 Post-Competition Testing

6.7.9.1 Post-competition checks must be conducted after Elimination and Qualification competitions and during the reporting time before Finals according to procedures specified in the "ISSF Equipment Control Guidelines." The Equipment Control Jury is responsible for supervising the conduct of all post-competition checks. Judges of the same gender as the athletes must be available for clothing and taping checks. Failure of the following specific post-competition checks must result in disqualification (DSQ):

a) Rifle: Shooting clothing, underclothing, taping and rifle specifications (trigger weighing when applicable);

b) Pistol: Shoes, taping, trigger weighing, pistol dimensions and grips (8.12), ammunition velocity checks and the weighing of bullets where applicable;

c) Shotgun: See Shotgun Rules; and

d) Running Target: Rifle weight, telescope power (10m), trigger weight (50m, 10.4.3.6 a) and marker tapes.

e) All disciplines: Failure to report for a post-competition check after being given written notice to report.

6.7.9.2 If an athlete fails a post-competition check, the Chairman of the Equipment Control Jury or one other Equipment Control or Competition Jury Member must confirm that the test was performed correctly and that the athlete is disqualified. The confirmation procedure must include using ISSF calibration testing equipment to confirm that the testing instruments are measuring accurately.

6.7.9.3 Appeals against a post-competition test disqualification may be submitted to the Jury of Appeal. The Jury of Appeal must decide if the test was performed correctly, but it may not repeat the test. The Jury of Appeal can overturn a post-competition check disqualification only if it finds that the test was performed incorrectly.

6.7.9.4 Targeted testing (selection of athletes on a non-random basis) may be done when a Jury has credible evidence that an athlete has altered or attempted to alter his gun, clothing or equipment.

Copyright: ISSF

6.8 COMPETITION JURY DUTIES AND FUNCTIONS

Juries are responsible for advising, assisting and supervising the competition officials appointed by the Organizing Committee.

a) Competition Juries (Rifle, Pistol, Shotgun, Running Target) supervise the conduct of events in their respective disciplines;

b) RTS (Results, Timing and Scoring) Juries supervise scoring and results operations; and

c) Equipment Control Juries supervise the testing of athletes' clothing and equipment.

6.8.1 Range Officers, RTS Officers and Referees appointed by the Organizing Committee are responsible for the actual conduct of the competitions while Juries act in an advisory and supervisory capacity. The Range Officers and Juries are mutually responsible for conducting the training and competitions in accordance with ISSF Rules and must ensure that these Rules are enforced in a fair and equitable manner during the competitions.

6.8.2 All Jury Members must wear the official ISSF Jury vest (red color) when on duty. Jury vests must be purchased from ISSF Headquarters. It is recommended that all Range Officers wear a distinctive vest or other means of identification (preferably in green color) when on duty. It is recommended that all Target Officers or other personnel who must go forward of the firing lines to perform their duties wear a vest in a fluorescent color or high visibility armbands.

6.8.3 Before the beginning of the competition, the Competition Juries must examine the shooting ranges and check the organizational arrangements and organization of operating personnel, etc., to ensure that they conform to ISSF Rules. Jury checks should be done in coordination with any earlier checks made by the Technical Delegate.

6.8.4 Jury Members must continuously observe the shooting positions and the equipment of the athletes.

6.8.5 Jury Members have the right to examine the guns, equipment, positions, etc., of the athletes at any time, during training and competitions.

6.8.6 During training and competitions, Jury Members are responsible for checking athletes clothing and equipment for compliance with ISSF Sponsorship/ Advertising Rules (4.4-4.7, 6.7.7.3);

6.8.7 During competitions, Jury Members should not approach an athlete while he is firing a shot (or series of shots in rapid fire events) unless a safety issue requires immediate action.

EDITION 2017 | Second Print 01/2018
Copyright: ISSF

6.8.8 A majority of the Jury must always be present on the range during competitions so that, when necessary, the Jury can meet and make decisions immediately.

6.8.9 Jury Members have the right to make individual decisions during competitions, but should confer with other Jury Members and Range Officers when any doubt exists. If a Team Official or Athlete does not agree with the decision of an individual Jury Member, a decision of the majority of the Jury may be requested by making a written protest.

6.8.10 Jury Members must be completely impartial in making decisions, regardless of the nationality, racial, relgious, ethnic or cultural identity of any athletes who are involved.

6.8.11 Juries must deal with any protest(s) that are submitted to the Jury in accordance with ISSF Rules. After consultation with the Range Officers and others directly concerned, the Jury must rule on any protest.

6.8.12 A Jury must delay the start of a Final if a protest involves athletes who could, depending upon the protest decision, qualify for the Final. The RTS Jury may release a Final Start List if a protest does not involve athletes who could qualify for the Final. Official Final Results cannot be released until all protests and appeals are decided.

6.8.13 A Jury must decide all cases that are not provided for in the ISSF Rules. Such decisions must be made within the spirit and intent of ISSF Rules. Any such decisions must be included in a Jury Chairman's Report that is submitted to the Technical Delegate after each Championship.

6.8.14 Athletes and Team Officials must not be members of a Jury. Jury Members must not advise, coach or assist athletes beyond the scope of the ISSF Rules at any time during the competition.

6.8.15 The Jury Chairman is responsible for directing Jury schedules and activities for ensuring the presence of sufficient member(s) of the Jury at all times, including all Official and Pre-Event Training.

6.8.16 The Jury Chairman must prepare a report on Jury decisions and actions to be submitted to the ISSF Secretary General through the Technical Delegate as soon as possible after the Championship.

Copyright: ISSF

6.9 ORGANIZING COMMITTEE COMPETITION OFFICIALS

6.9.1 Chief Range Officer (CRO) Duties and Functions

A Chief Range Officer (CRO) must be appointed for each range. The CRO is in charge of all Range Officers (RO) and range personnel and is responsible for the correct conduct of the shooting event. The CRO is responsible for giving all range commands and for ensuring the cooperation of range personnel with the Jury. The CRO is responsible for the rapid correction of any equipment failures and for making available the necessary experts and supplies to operate the range. It is strongly recommended that an Assistant CRO be appointed to serve as a backup for the CRO, especially in maintaining range documentation and Range Incident Reports (Form IR) regarding events and irregularities that occur during the competition.

6.9.2 Range Officer (RO) Duties and Functions

A Range Officer (RO) must be appointed for each Range Section or for each ten (10) firing points. Range Officers must:

a) Be responsible to the CRO for the conduct of the competition in the target section entrusted to them;

b) Check the names and Bib Numbers of athletes to ensure that they correspond with the start list;

c) Ensure that the athletes' guns, equipment and accessories have been examined and approved;

d) Check athletes' shooting positions and equipment and advise the Jury of any possible violations;

e) Ensure that the commands of the CRO are followed;

f) Take necessary actions regarding a malfunction, protest, disturbance, or any other matter arising during the competition;

g) Receive verbal protests and immediately report them to a Jury Member;

h) Record all irregularities, disturbances, penalties, malfunctions, cross-fires, extra time allowed, repeated shots authorized, etc. on Range Incident Report Forms (IR) and on the target or printer strip as appropriate; and

i) Refrain from any conversations with athletes or from making other comments regarding scores.

EDITION 2017 | Second Print 01/2018
Copyright: ISSF

6.9.3 Chief RTS (Results, Timing and Scoring) Officer (CRTSO) Duties and Functions

The CRTSO must be appointed for each Championship. He is in charge of all RTSO and Entry and Results Personnel. The CRTSO is responsible for the correct conduct of all scoring and results operations at the Championships.

6.9.4 RTS Officers (RTSO) Duties and Functions

One RTSO should be appointed for each range that is used for Qualification competitions. The RTSOs are responsible for working with the RTS Jury, Competition Jury, ROs and Official Results Provider to facilitate the conduct of scoring and results operations on their ranges.

6.10 EST COMPETITION OPERATIONS

6.10.1 EST Technical Officers

a) EST Technical Officers are responsible for operating and maintaining the Electronic Scoring Target equipment;

b) EST Technical Officers may advise Range Officers and Jury Members, but they must not make any decisions regarding the application of ISSF Rules; and

c) EST Technical Officers are designated by the Official Results Provider or the Organizer and must be persons with special training in EST operations and electronic competition management systems (computer software).

6.10.2 Target Officers

a) Target Officers are appointed by the Organizing Committee to assist in the operation and maintenance of EST:

b) Before each relay of each event, Target Officers must ensure that there are no shot holes on the white surface of the target and that all shot marks on the frame are clearly indicated;

c) During competitions, Target Officers patch Backing Targets and Backing Cards and change the Control Sheets; and

d) **Backing Targets**, **Backing Cards** and **Control Sheets** must not be patched or changed until after all scoring is completed.

Copyright: ISSF

6.10.3 Jury Member Duties – Electronic Scoring Targets

6.10.3.1 Member(s) of the RTS Jury must be present on the ranges to supervise scoring and results operations and assist in the resolution of any questions or protests relating to scoring. Members of the Competition Jury must assist in cases where actions or decisions need to be taken and there are only two or fewer RTS Jury Members available.

6.10.3.2 Before each relay of an event, a Jury Member must inspect the electronic scoring targets to confirm that:

a) There are no shot holes on the white surface of the target;

b) Any shot marks on the frame are clearly indicated;

c) The Control Sheets are renewed; and

d) The Backing Cards and Backing Targets have no shots outside of the central area that is covered by the Control Sheet.

EDITION 2017 | Second Print 01/2018
Copyright: ISSF

6.10.4 Shooting on Electronic Scoring Targets

a) Athletes must familiarize themselves during training with the control buttons that alter the target presentation on the monitor screen (ZOOM) and that change from a Sighting target (SIGHTING) to a Match target (MATCH);

b) In 10m, 25m and 50m single position events, changing from Sighting to MATCH shots is under control of range personnel. If any athlete is in doubt, he must ask a Range Officer for assistance;

c) In 3-Position events, after athletes complete the kneeling or prone positions, changing from MATCH to Sighting and back to MATCH is the responsibility of the athlete. Athletes may fire unlimited Sighting shots before starting MATCH firing shots in the prone and standing positions. No additional time is allowed for these Sighting shots. If an athlete inadvertently fails to switch from MATCH to Sighting after changing positions, any shots recorded as extra shots in the previous position must be nullified and the target must be reset to Sighting.

d) It is not permitted to **obscure the athlete's monitor-screen** or any part of the screen. The whole screen must be visible to the Jury and range personnel;

e) Athletes and range officials must **not touch the printer control panels** and/or printer strips before the end of the relay or event, except when authorized by the Jury;

f) Athletes should sign the printer strip (next to the score total) before leaving the range to identify their score.

g) When an athlete fails to sign the printer strip a Jury Member or range official should initial this printer strip to allow it to be sent to the RTS Office.

6.10.5 Target Scoring Complaints During Sighting Shots

If an athlete complains during sighting shots about the correct recording or evaluation of the shot(s), the Jury may offer to move him to another firing point.

a) The athlete will be given appropriate extra time;

b) The Jury will, as soon as possible, examine the sighting shot(s) on the original firing point by applying the **Procedure for EST Examination**; and

c) If this subsequent examination confirms that the target on the original firing point provided correct results, the athlete will be penalized with the **DEDUCTION** of two (2) points from the lowest value shot of his first competition series.

Copyright: ISSF

6.10.6 Failure of the Paper or Rubber Band to Advance

If the Jury confirms that the problem causing an athlete complaint is because the paper or rubber band is not advancing properly:

a) The athlete will be moved to a reserve position;

b) He will be permitted unlimited sighting shots to be taken within the time remaining for the event plus any additional time granted;

c) He will repeat the number of MATCH shots determined by the Jury plus the number of shots necessary to complete the event;

d) After the relay, the RTS Jury will decide which shots are to be counted from each target; and

e) The athlete will be credited with the scores of all shots that were correctly displayed on the monitor of the first target, plus the scores of all MATCH shots fired on the second target that were necessary to complete the course of fire.

6.10.7 Protest Concerning a Shot Value

If a shot registers and displays, but the athlete protests the value indicated in accordance with Rule 6.16.5.2:

a) After the relay, the detailed printer results (LOG-Print) must be generated by the Technical or Range Officers for all firing lanes on which complaints or protests have been made, and for the immediately adjacent lanes, before the target systems are reset for the next relay;

b) After the completion of the relay, the **Procedure for EST Examination** will be applied;

c) Any non-indicated or incorrectly indicated shot must be scored by the RTS Jury; and

d) If the RTS Jury determines that a protested shot was scored correctly, a two point penalty will be applied (6.16.5.2.c).

EDITION 2017 | Second Print 01/2018
Copyright: ISSF

6.10.8 PROCEDURE FOR EXAMINING ELECTRONIC SCORING TARGETS FOLLOWING A SCORE PROTEST OR COMPLAINT

6.10.8.1 If there is a score protest, complaint or no indication of a shot, etc., a Jury Member must collect the following items (the number of the firing point and the orientation of the card, sheet or target, the relay and series and the time of collection must be noted on each):

a) The Control Sheet (25m / 50m). If the location of any shot hole is out of the area of the Control Sheet, the geometric relation between the shot holes on the Control Sheet and the Backing Card must be made before the Control Sheet is removed;

b) The Backing Card (25m / 50m / 300m);

c) The Backing Target (25m);

d) The black paper strip (10m);

e) The black rubber band (50m);

f) The Range Incident Report;

g) The LOG print; and

h) The data record from the electronic scoring target computer (if necessary).

6.10.8.2 A Jury Member must examine the face of the EST and the frame and record the location of any shots outside the black aiming mark.

6.10.8.3 No CLEAR LOG must be made before the RTS Jury has given permission.

6.10.8.4 The number of shot holes must be counted and their location taken into account.

6.10.8.5 Jury Members must examine these items and then make independent assessments before a formal Jury decision is made.

6.10.8.6 A Jury Member must supervise any manual intervention of the control computer results (e.g. the recording of penalties, corrected scores after malfunctions etc.).

6.10.9 EST FAILURE

These Rules apply to 10m, 50m and 300m EST. For procedures concerning 25m EST failures, see Rule 8.10. For procedures concerning Running Target EST failures, see Rule 10.11.

Copyright: ISSF

6.10.9.1 **When ALL Targets on a Range Fail**

a) The time of failure and the expired shooting time must be recorded by the Chief Range Officer and the Jury;

b) All completed competition shots of each athlete must be counted and recorded. In the event of a range power supply failure, this may involve waiting until the power supply is restored to enable the number of shots registered by the target, not necessarily on the firing point monitor, to be established; and

c) After the failure is rectified and the full range is in operation, an **additional five (5) minutes** will be added to the competition time remaining. The time for recommencing is to be announced over the loudspeaker system at least five (5) minutes beforehand. Athletes must be allowed to resume their position in the five (5) minutes before the competition restarts. Unlimited sighting shots must be allowed during the remaining shooting time, but only before competition shots are resumed.

6.10.9.2 **When a SINGLE Target Fails**

a) If the EST cannot be repaired within five (5) minutes, the athlete must be moved to a reserve position;

b) When he is ready to shoot, an **additional five (5) minutes** will be added to the competition time remaining; and

c) He will be permitted unlimited sighting shots before he starts the remaining competition shots.

EDITION 2017 | Second Print 01/2018
Copyright: ISSF

6.10.9.3 **When a Shot Fails to Register or Display on the Monitor**

The athlete must immediately inform the nearest Range Officer of the failure. The Range Officer must make a written note of the time of the complaint. One or more Jury Member(s) must go to the firing position. The athlete must be directed to fire one more MATCH shot at his target:

If the value and location of this shot is registered and displayed on the monitor:

a) The athlete must be directed to continue the competition;

b) The value, location and time of firing of this extra shot must be recorded, its shot-number (after including the missing shot) and its value and its shot-location, and the firing point number must be given to the Jury in writing and recorded on the Range Register and a Range Incident Report;

c) After the end of that relay, the **Procedure for EST Examination** will be applied. Using this information and the time of the extra shot and its location, the RTS Jury will determine whether all shots, including the extra shot, are recorded on the computer record;

d) If all the shots are recorded correctly, then the questioned shot (shot that did not register or display) will be counted in the score of the athlete, as well as the shot fired immediately after (as the "extra" shot), but the last shot fired (extra to the competition) will be annulled;

e) If the questioned shot was not located by applying the **Procedure for EST Examination** or was confirmed as an off-target miss (Note: This means a questioned 10m shot could not be found on the witness strip or target face; a questioned 25m shot could not be found on the backing target, control sheet or backing card or there was evidence that a questioned 50m or 300m shot was an off-target miss), then the questioned shot must be scored as a miss and the last shot fired (extra to the competition) must be nullified; or

f) If the questioned shot was found or was located in the computer memory, the RTS Jury must determine and count the score of the questioned shot; or

g) If a questioned 50m or 300m shot is not found, the Jury must decide whether to score the missing shot as a miss and nullify the last shot or, if there is no credible evidence that the questioned shot was an off-target miss, the Jury may conclude that a target system anomaly occurred and count the extra shot in lieu of the missing shot and the last shot fired.

Copyright: ISSF

6.10.9.4 OR: If the extra shot fired as directed does not register or display and the EST cannot be repaired within five (5) minutes:

a) The athlete must be moved to a reserve position;

b) When he is ready to shoot, an **additional five (5) minutes** will be added to the competition time remaining and he will be permitted unlimited sighting shots;

c) **In 10m and 50m Rifle and Pistol Events,** the athlete will repeat the two (2) MATCH shots that did not register or display on the previous target used.

6.10.9.5 OR: **In 10m Running Target Events,** the athlete will be permitted two (2) minutes to resume his position and then allowed two (2) additional sighting shots Rule 10.7.4.2). Then he will repeat the two (2) competition shots which did not register or display on the previous target used and fire the remaining shots of the series. The athlete will be credited with the score of all the shots that were displayed on the monitor of the first target plus the score of all the properly fired competition shots that were displayed on the second target used. If the two (2) extra shots were later found in the computer record of the previous target they will be annulled.

EDITION 2017 | Second Print 01/2018
Copyright: ISSF

6.11 COMPETITION PROCEDURES (SEE ALSO 6.17, FINALS COMPETITION PROCEDURES)

6.11.1 Rules for 10m and 50m Rifle and Pistol Events

6.11.1.1 Preparation and Sighting Time

Athletes must be given 15 minutes Preparation and Sighting Time before MATCH firing starts to make their final preparation and fire unlimited **sighting shots**.

a) The Preparation and Sighting Time must be timed to end approximately 30 seconds before the official starting time for MATCH firing.

b) Sighting targets must be visible at least 15 minutes before the Preparation and Sighting Time starts;

c) Athletes may not place their guns and equipment on their firing points until the Chief Range Officer has called the athletes to the line;

d) The Chief Range Officer must call athletes to the line at least 15 minutes before the Preparation and Sighting Time starts;

e) If there is more than one relay, each relay must be allowed the same amount of time to bring their equipment to the firing line;

f) After the Chief Range Officer calls athletes to the line, they are permitted to handle their guns, dry fire (safety flags may be removed for dry firing) or carry out holding and aiming exercises on the firing line before the Preparation and Sighting Time starts;

g) Pre-competition checks by the Jury and Range Officers must be completed during the 15 minutes before the Preparation and Sighting Time starts;

h) The Preparation and Sighting Time begins with the command **"PREPARATION AND SIGHTING TIME…START;"** No shot may be fired before the command **"START;"**

i) An athlete who fires a shot or shots **before the "START"** command for the Preparation and Sighting Time may be disqualified if safety is involved. If safety is not involved (6.2.3.5), the first competition shot must be registered as a miss (0);

j) After 14 minutes, 30 seconds have elapsed in the Preparation and Sighting Time, the Range Officer must announce **"30 SECONDS."**

Copyright: ISSF

k) At the end of the Preparation and Sighting Time, the Chief Range Officer must command **"END OF PREPARATION AND SIGHTING…STOP."** There must be a brief pause of approximately 30 seconds when the Target Officer will reset the targets for MATCH firing; and

l) If an athlete fires a shot after the command **"END OF PREPARATION AND SIGHTING…STOP"** and before the **"MATCH FIRING…START"** command, the shot must not be counted as a MATCH shot and a two (2) point penalty must be applied to the first competition shot.

6.11.1.2 **START of MATCH Firing**

a) When all targets are reset for MATCH firing, the Chief Range Officer will command **"MATCH FIRING…START."** MATCH firing is considered to have started when the CRO has given the command **"START;"**

b) Every shot fired after the start of MATCH firing must be recorded as a MATCH shot, however, dry firing is allowed;

c) After the start of MATCH firing, no further sighting shots are allowed, except for position changes in 50m and 300m Rifle 3-Position events (see Rule 7.7.3) or when permitted by the Jury in accordance with these Rules;

d) Any further sighting shot(s) fired in contravention of this rule must be scored as miss(es) in the competition;

e) The CRO must inform athletes by loudspeaker of the time remaining at both ten (10) minutes and five (5) minutes before the end of the competition time;

f) A shot or shots that are not fired during the MATCH firing time must be scored as miss(es) on the last competition target(s), unless the CRO or a Jury Member has authorized extra time; and

g) If, during MATCH firing on 10m ESTs, the Jury directs an athlete to move his position laterally (sideways) within his firing point by 30 cm or more, the athlete may be offered additional sighters and 2 minutes additional time before he resumes MATCH firing.

6.11.1.3 **"STOP" COMMAND**

The competition must stop at the command **"STOP."**

a) If a shot(s) is fired after the command**"STOP,"** that shot(s) must be scored as a miss; and

b) If the shot(s) cannot be identified, the best hit(s) must be deducted from the score of that target and scored as miss(es).

EDITION 2017 | Second Print 01/2018
Copyright: ISSF

6.11.2 Specific Rules for 10m Air Gun Events

6.11.2.1 If an athlete **releases the propelling charge** prior to the Preparation and Sighting Time he must be given a **WARNING (Yellow Card)** for the first violation and a **DEDUCTION (Green Card)** of two (2) points from the lowest value shot of the first MATCH series for the second and subsequent violations.

6.11.2.2 Any release of the propelling charge, after MATCH firing starts, without a hit on the target will be scored as a miss. Dry firing without release of the propelling charge is permitted except during Finals.

6.11.2.3 If an athlete wishes to change, or to fill, a gas or air cylinder, he must leave the firing point to do so, after obtaining permission from the Range Officer. No extra time is allowed to change or fill a gas or air cylinder during a competition.

6.11.2.4 The gun may only be loaded with one (1) pellet. When a gun is accidentally loaded with more than one (1) pellet:

a) If the athlete is aware of the situation, he must raise his non-shooting hand to indicate to a Range Officer that he has a problem. A Range Officer must then supervise the unloading of the gun and no penalty will be incurred. No extra time will be allowed for this; or

b) If the athlete is unaware of the situation and fires two pellets at the same time, he must report this to a Range Officer. If there are two (2) hits on the target, the score of the higher value shot will be counted and the second shot will be annulled. If there is only one (1) hit on the target, this will be counted.

6.11.3 Interruptions in 10m Events, 50m Rifle and Pistol Events and 300m Rifle Events

6.11.3.1 If an athlete must stop firing **for more than three (3) minutes** through no fault of his own and this interruption was not caused by a malfunction of his gun or ammunition, he may demand extra time equal to the amount of time lost, or the time remaining when the interruption occurred, plus one (1) minute, if during the last five (5) minutes of the competition.

6.11.3.2 If an athlete is interrupted **for more than five (5) minutes** through no fault of his own and this interruption was not caused by a malfunction of his gun or ammunition**, or if the athlete is moved to another firing point**, he may have additional unlimited sighting shots at the beginning of his remaining shooting time together with any time extension granted plus an additional five (5) minutes.

a) Range Officers or Jury Members must ensure that a complete explanation is recorded on a Range Incident Report; and

b) Any **extension of time** allowed by the Jury or Range Officers must be documented, stating the reason on a Range Incident Report.

Copyright: ISSF

6.11.4 Late Arrival By Athlete

If an athlete **arrives late** for a competition, he may participate but will not be given any extra time. If an athlete arrives after the Preparation and Sighting Time, no additional sighting time will be given. When it can be proven that an athlete's late arrival was due to circumstances beyond his control, the Jury must grant extra time, including time for Preparation and Sighting if this does not delay the start of the Final or disrupt the overall shooting program. In this case the Jury will determine when and on which firing point the late athlete may start.

6.11.5 Irregular Shots -- Too Many Shots in an Event or Position

If an athlete in a 10m, 50m or 300m event fires more shots in the event or position than are provided for in the program, the extra shot(s) must be annulled on the last competition target(s). If the shot(s) cannot be identified, the highest value shot(s) must be annulled on the last competition target. The athlete must also be penalized by a deduction of two (2) points for each excessive shot fired, deducted from the lowest value shot(s) in the first series.

6.11.6 Crossfires

6.11.6.1 Crossfires of competition shots must be scored as misses.

6.11.6.2 If an athlete crossfires a sighting shot on the sighting target of another athlete no penalty is incurred.

6.11.6.3 If an athlete crossfires a sighting shot on the MATCH target of another athlete, he must be penalized by the deduction of two (2) points from his own score deducted from the first series.

6.11.6.4 If an athlete receives a confirmed crossfire shot and it is impossible to determine which shot is his, he must be credited with the value of the highest undetermined shot.

6.11.6.5 If there are more hits on an athlete's MATCH target than are provided for in the program, and if it is impossible to confirm that another athlete(s) fired the shot(s), the hit(s) of the highest value must be nullified.

6.11.6.6 If an athlete wishes **to disclaim** a shot on his target, he must report this immediately to a Range Officer.

6.11.6.7 If the Range Officer confirms that the athlete did not fire the disputed shot(s), he must make the necessary entry on a Range Incident Report and on the Range Register and the shot must be annulled.

6.11.6.8 If the Range Officer cannot confirm beyond all reasonable doubt that the athlete did not fire the disputed shot(s), the shot(s) must be credited to the athlete and must be so recorded.

EDITION 2017 | Second Print 01/2018
Copyright: ISSF

6.11.6.9 The following must be considered as reasons to justify the annulment of a shot:

a) If a Range Officer confirms by his observation of the athlete and the target that the athlete did not fire the shot;

b) If a missing shot is reported by another athlete or a Range Officer at approximately the same time, and from within the neighboring two or three firing points; and

c) When using 300m EST with shot sensors, crossfires should not register on the recipient's target, but an indication will be received at the control center. The firer, whose target does not receive the expected shot, will be given a miss (zero) and an indication that he has cross-fired.

6.11.7 Disturbances

If an athlete claims that he was disturbed while firing a shot, he must keep his gun pointed downrange and immediately inform the Range Officer or Jury Member. He must not disturb other athletes. If the claim is considered justified, the shot(s) must be annulled and the athlete may repeat the shot(s) or series. If the claim is not considered justified, the shot(s) must be credited to the athlete and he may continue shooting; no penalty will be applied.

Copyright: ISSF

6.11.8 Special Competition Regulations

a) During the Preparation and Sighting Times for all competitions, announcements and/or visual displays may be used to inform spectators about the event. During Preparation and Sighting and Match Firing Times for Elimination and Qualification competitions, music may be played. Music must be played during Finals (6.17.1.11).

b) It is not permitted to put any substance on the floor of the firing point to gain an unfair advantage or to wipe the firing point without permission;

c) It is not permitted to place non-removeable tape or draw lines with a permanent marker on the floor;

d) No one may change or modify any range structure or equipment;

e) Smoking is prohibited in all areas used by athletes and officials as well as in the spectator areas of the ranges;

f) The use of mobile phones, walkie-talkies, pagers or similar communication or electronic devices by athletes, coaches and team officials while on the field of play is prohibited. All mobile phones etc. must be switched off or placed on silent mode;

g) Flash photography is prohibited until after competitions are completed; and

h) Notices must be displayed to inform spectators that mobile phones must be placed on silent mode, that smoking is not permitted and that flash photography is prohibited until competitions are completed.

EDITION 2017 | Second Print 01/2018
Copyright: ISSF

6.12 RULES OF CONDUCT FOR ATHLETES AND OFFICIALS

6.12.1 No type of demonstration or political, religious or racial propaganda is permitted during ISSF Championships.

6.12.2 Each team must have a team leader who is responsible for maintaining discipline within the team. An athlete may be appointed as a team leader. The team leader must cooperate with competition officials at all times in the interest of safety, the efficient conduct of the competition and good sportsmanship.

6.12.3 The Team Leader is responsible for:

a) Completing the necessary entries with accurate information and submitting them to appropriate officials within designated time limits;

b) Being familiar with the program;

c) Having team members report, ready to shoot, at designated firing points, at the correct times, with approved equipment;

d) Checking scores and filing protests, if necessary;

e) Observing preliminary and official bulletins, scores and announcements;

f) Receiving official information and informing team members; and

g) Representing the team at all official activities.

6.12.4 The Athlete is responsible for:

a) Reporting to his firing point, ready to shoot, at the correct time, with equipment that complies with these rules;

b) Taking his firing position on his designated firing point so that he does not disturb adjacent athletes; and

c) Conducting himself so that he does not disturb or adversely affect the performances of other athletes. If, in the opinion of the Jury, an athlete's behavior or actions disturbs other athletes, the athlete may be given a warning, penalty or disqualification, depending upon the circumstances.

6.12.5 Coaching During Any Event

6.12.5.1 In all events, non-verbal coaching is allowed. In 50m Three-Position Finals, verbal coaching is allowed only during changeover times. While on the firing line, an athlete may speak only with Jury Members or range officials. Coaching during training is permitted, but such coaching must not disturb other athletes.

Copyright: ISSF

6.12.5.2 If an athlete wishes to speak with his Coach or Team Official during an Elimination or Qualification, the athlete must unload his gun and leave it in a safe condition on the firing line with the action open and a safety flag inserted. An athlete may leave the firing line only after notifying a Range Officer and without disturbing other athletes.

6.12.5.3 If a coach or team official wishes to speak with a team member on the firing line, the team official must not contact the athlete directly or talk with the athlete while he is on the firing line. The team official must obtain permission from a Range Officer or Jury Member, who will call the athlete off of the firing line.

6.12.5.4 If a team official or athlete violates the rules concerning coaching, a warning must be issued the first time. In repeated cases, two (2) points must be deducted from the athlete's score and the team official must leave the vicinity of the firing line.

6.12.6 Penalties for Rule Violations

6.12.6.1 Deciding Open and Concealed Violations

The Jury must decide violations according to these standards:

a) In the case of an **open violation** of the Rules, a **Warning (Yellow Card)** must first be given so the athlete may have an opportunity to correct the fault. Whenever possible, the warning should be given during training or the Preparation and Sighting Time. If the athlete does not correct the fault as instructed by the Jury, two (2) points must be deducted from his score. If the athlete still does not correct the fault after receiving a **Deduction (Green Card)**, **Disqualification (Red Card) (DSQ)** must be imposed; or

b) In the case of a **concealed violation** of the Rules, when the fault is deliberately concealed, **Disqualification (Red Card) (DSQ)** must be imposed; or

c) If, when asked to give an explanation for an incident, an athlete consciously and knowingly gives **false information,** two (2) points must be deducted or in serious cases, disqualification may be imposed.

EDITION 2017 | Second Print 01/2018
Copyright: ISSF

6.12.6.2 In cases of a violation of ISSF Rules or the instructions of Range Officers or Jury, the following penalties may be imposed on the athlete by a Jury Member or the Jury.

a) **Warning (Yellow Card)**. A warning must be expressed in terms that will leave no doubt that it is a **Warning** and the yellow card must be shown. However, it is not necessary to precede other penalties with a warning. This must be recorded on a Range Incident Report and noted on the Range Register. A warning may be given by an individual Jury Member;

b) **Deduction (Green Card)**. Deduction of points from the score, expressed by a minimum of two (2) Jury Members, showing a **Green Card** with the word "**Deduction**." This must be recorded on a Range Incident Report Form, marked on the printer strip, and noted on the Range Register. A deduction may be given by an individual Jury Member; and

c) **Disqualification (Red Card) (DSQ)**. An athlete must be disqualified (DSQ) for failure to pass a post-competition check (6.7.9.1) or for a violation of Shotgun Rule 9.4.1.1 or 9.4.3.2 c). Disqualification for any other reason may only be given by the decision of a majority of the Jury. The disqualification of an athlete is expressed by the Jury by showing a **Red Card** with the word "**Disqualification**." If an athlete is disqualified during any phase of an event (Elimination, Qualification or Final), the results for that athlete for all phases of that event must be deleted and the athlete must be listed at the end of the results list with an explanation regarding why the athlete was disqualified.

d) **Unsportsmanlike Behavior (DQB).** If an athlete is disqualified for an anti-doping violation, for a serious safety violation or for the physical abuse of a competition official or another athlete (Rule 6.12.6.4) as decided by a majority of the Jury, all results for that athlete for all events in the Championship must be deleted and the explanation(s) must indicate DQB.

e) Penalties should be expressed both with a verbal explanation and with the display of yellow, green or red cards. The size of penalty cards should be approximately 70 mm x 100 mm.

f) A team, of which a member has been disqualified, must not be ranked and must be shown in the result list with the remark "DSQ."

g) When there is a penalty or disqualification, a Jury Member must provide or approve remarks for the Results Lists to explain the penalty or disqualification.

6.12.6.3 Serious Safety Violations

a) If the Jury determines than an athlete has handled a gun or violated a safety rule in a **dangerous manner**, the athlete must be disqualified (DSQ) (see 6.2.2).

Copyright: ISSF

6.12.6.4 Physical Abuse of a Competition Official or Athlete

An athlete or team official who makes physical contact with a Jury Member, Referee, Range Officer, other competition official or another athlete by grasping, pushing, shoving, striking or similar means may be excluded from further participation in a Championship. Any such act of physical abuse must be reported to the Chairman of the Jury responsible for supervising that area of activity. One or more witnesses or physical evidence must confirm the act of alleged abuse. The Jury must then decide whether the athlete or team official may be excluded from that Championship. A decision to exclude may be appealed to the Jury of Appeal (6.16.6). If the Jury or Jury of Appeal concludes that the act of abuse was of such a serious nature that further sanctions are warranted, they may, in addition to excluding the athlete or team official from the current championship also refer the case to the ISSF Ethics Committee (3.12.3.5, Annex "CE") for further consideration.

6.13 MALFUNCTIONS

6.13.1 A malfunction occurs when a gun fails to fire a projectile when the trigger is pulled.

6.13.2 Malfunctions may be either ALLOWABLE or NON-ALLOWABLE.

6.13.2.1 Allowable Malfunctions are:

a) A cartridge fails to fire;

b) A bullet or pellet is lodged in the barrel; or

c) The gun fails to fire or function properly and the trigger mechanism has been released.

6.13.2.2 Non-Allowable Malfunctions are:

a) The athlete has opened the action of his gun;

b) The safety was engaged;

c) The athlete did not properly load his gun;

d) The athlete did not pull the trigger; or

e) The malfunction is due to any cause that could reasonably have been corrected by the athlete.

EDITION 2017 | Second Print 01/2018
Copyright: ISSF

6.13.3 If an athlete has a gun or ammunition malfunction, he may repair it and continue shooting or, if the malfunction was an ALLOWABLE malfunction, he may continue shooting with another gun of the same type and caliber that complies with these Rules. The replacement gun will be subject to targeted testing.

6.13.4 No extra competition time is allowed to repair or replace a gun after any malfunction in 10m, 50m and 300m Rifle or Pistol Elimination or Qualification Rounds, but the Jury may allow an athlete to fire additional sighting shots after repairing or replacing a malfunctioning gun if the malfunction was ALLOWABLE.

6.13.5 Specific rules concerning malfunctions in 25m Pistol events are found in Rule 8.9.3.

6.13.6 Specific rules concerning malfunctions in Finals are found in Rules 6.17.1.6, 6.17.4.m and 6.17.5.l.

6.13.7 Range Officers or Jury Members must ensure that malfunctions are documented on Range Incident Reports or Malfunction Score Computation Forms and in the Range Register.

6.14 SCORING AND RESULTS PROCEDURES

6.14.1 The RTS Office must publish Preliminary Results on the Range Scoreboard as soon as possible after each relay and stage and completion of each event.

6.14.2 Official Final Results must be published on the Main Scoreboard after the Protest Time has expired.

6.14.3 **Results Distribution:** The organizer must provide for the distribution of Preliminary and Official Final Results to all match officials, participating teams and media. This may be done by distributing paper or electronic (see 6.6.5 b, Sustainability Option) Results Lists.

Copyright: ISSF

6.14.4 After each ISSF Championship, ISSF Headquarters will produce an electronic (on-line) Official Results Book. The Official Results Book for each Championship must contain:

a) A table of contents;

b) A Results Certification Page to be signed by the Technical Delegate(s) and all Jury Chairmen;

c) A list of Competition Officials;

d) A list of Entries by Nation and by event;

e) The Competition Schedule;

f) A list of Medalists by name;

g) A list of Medals by Nation by number;

h) A list of New and Equaled Records; and

i) All final results in the standard ISSF order of events as follows: 1) Men‘s 10m, 50m and 300m rifle events; 2) Men‘s 10m, 25m and 50m pistol events; 3) Men‘s Trap, Skeet and Double Trap events; 4)Men‘s 10m and 50m Running Target events; 5) Women‘s 10m, 50m and 300m Rifle events; 6) Women‘s 10m and 25m Pistol events; 7) Women‘s Trap and Skeet events; and 8) Women‘s 10m Running Target Events.

6.14.4.1 These lists must contain the full names as used in the ISSF ID Numbers: Family name (in capital letters), full given name (first letter only capitalized), Bib Numbers and the Nation (official IOC abbreviation) of each athlete.

EDITION 2017 | Second Print 01/2018
Copyright: ISSF

6.14.4.2 The following abbreviations must be used in results lists when appropriate:

DNF	Did not Finish
DNS	Did not Start
DSQ	Disqualified
DQB	Disqualification for Unsportsmanlike Behavior
WR	New World Record
QWR	New Qualification World Record
EWR	Equaled World Record
EQWR	Equaled Qualifcation World Record
WRJ	New World Record Junior
QWRJ	New Qualification World Record Junior
EWRJ	Equaled World Record Junior
EQWRJ	Equaled Qualification World Record Junior
OR	New Olympic Record
EOR	Equaled Olympic Record
QOR	Qualification Olympic Record
EQOR	Equaled Qualification Olympic Record

6.14.5 The Official Final Results must be verified and signed by a Member of the RTS Jury to confirm its accuracy.

6.14.6 All irregularities, penalties, misses, malfunctions, extra time allowed, repeated shots/series or the annulment of shots, etc., must be clearly marked and recorded on a **Range Incident Report** and the Range Register, printer strip by a Range Officer and/or Jury Member. Copies of completed **Range Incident Reports** (Form IR) must immediately be forwarded to the scoring and results office. At the end of each competition, the RTS Jury must examine the results to confirm that all malfunction calculations and any penalties are correctly recorded in the results list.

6.14.7 Deductions from Rifle and Pistol scores must always be made in the series in which the violation occurred. If general deductions are involved they must be made from the lowest value MATCH shot(s) in the first series of the stage where the deduction applies.

6.14.8 The RTS Jury must check the ten (10) best individual and three (3) best team results prior to approving the Final Results List. When EST are used, this check must be done by comparing scores recorded in the main computer with scores from the printer strips or an independent memory source (Rule 6.3.2.7) plus all manual score interventions documented by Incident Reports (IR) or malfunction forms.

Copyright: ISSF

6.14.9 WORLD RECORDS

World Records will be established in all ISSF Championships in accordance with General Regulations, Art. 3.9 (see also 6.1.2 b) in all ISSF events where gold medals are awarded.

6.14.9.1 World Records (WR) for Olympic events will be established in the Finals of those events using Finals results only; World Records (WR) for recognized non-Olympic events will be established by using total results in those events.

6.14.9.2 Olympic Records (OR) may only be established in the Olympic Games.

6.14.9.3 World Records Junior (WRJ) for Olympic events will be established in the Finals of those events using Finals results only; World Records Junior (WRJ) for recognized non-Olympic events will be established by using total results in those events.

6.14.9.4 Qualification World Records (QWR) and Qualification World Records Junior (QWRJ) will be established by using total results in Qualification competitions in all Olympic events.

6.14.9.5 When a World Record is established in an ISSF Championship, the report **Procedures for Verification of World Records** (Rule 3.12.3.6, Annex R) must be completed and forwarded to ISSF Headquarters by the Technical Delegate.

EDITION 2017 | Second Print 01/2018
Copyright: ISSF

6.15 TIE-BREAKING

6.15.1 Individual Ties in 10m, 25m, 50m and 300m Events

All tied scores will be broken for 10m, 25m, 50m, and 300m events by applying the following Rules:

a) The highest number of inner tens;

b) The highest score of the last ten (10) shot series working backward by 10-shot series in full ring scoring (not inner tens or decimals) until the tie is broken;

c) If any ties remain, scores will be compared on a shot-by-shot basis using inner tens (i. e. an inner ten outranks a 10 that is not an inner ten) beginning with the last shot, then the next to the last shot, etc.;

d) If any ties remain, and EST are used, scores will be compared on a shot-by-shot basis using decimal ring scores beginning with the last shot, then the next to the last shot, etc.;

e) If any ties remain, the athletes must have the same ranking and must be listed in Latin alphabetical order using the athlete's family name;

f) **When decimal scoring Is used** for 10m Air Rifle or 50m Rifle Prone Elimination or Qualification events, ties will be broken by the highest score of the last ten shot series, etc. (decimal scores) and then by comparing decimal scores on a shot-by-shot basis beginning with the last shot, then the next to the last shot, etc.

6.15.2 Ties in Shotgun Events (see Shotgun Rule 9.15)

6.15.3 Ties in Running Target Events (see Running Target Rule 10.12)

6.15.4 Ties in Olympic Events with Finals

If there is a tie to be eligible for Rifle or Pistol Finals from the Qualification, the tie will be broken by Rule 6.15.1. If there is a tie to be eligible for Shotgun Finals from the Qualification, the tie will be broken by Rule 9.15.1.

6.15.5 Ties in Team Events

Ties in team events, including ties in the Qualification stage of Mixed Team events, must be decided by totaling the results of all members of a team and following the procedures for breaking individual ties.

6.16 PROTESTS AND APPEALS

6.16.1 All Protests and Appeals are to be decided in accordance with ISSF Rules.

Copyright: ISSF

6.16.2 Verbal Protests

6.16.2.1 Any athlete or team official has the right to protest a condition of the competition, decision or action of a competition official immediately and verbally to a Referee, Range Officer or Jury Member on the following matters:

a) An athlete or team official considers that the ISSF Rules or the competition program were not followed in conducting the competition;

b) An athlete or team official does not agree with a decision or action by a competition official, Referee, Range Officer or Jury Member;

c) An athlete was impeded or disturbed by other athlete(s), competition official(s), spectator(s), member(s) of the media or other person(s) or cause(s);

d) An athlete had a long interruption in shooting caused by range equipment failure, the clarification of irregularities or other cause(s); and

e) An athlete had irregularities regarding shooting times, including shooting times that were too short.

6.16.2.2 Referees, Range Officers and Jury Members must consider verbal protests immediately. They may take immediate action to correct the situation or refer the protest to the full Jury for a decision. In such cases, a Referee, Range Officer or Jury Member may stop the shooting temporarily if necessary.

6.16.3 Written Protests

Any athlete or team official who does **not agree** with the action or decision taken on a **verbal protest** may protest in writing to the Jury. Any athlete or team official also has the right to submit a **written protest** without making a verbal protest. All written protests must be submitted to a member of the appropriate Jury not later than 20 minutes (10 minutes for Shotgun) after the matter in question and the protest fee becomes payable. Written Protests and Appeals must be submitted on the ***ISSF Protest Form*** (see Protest Form at 6.19).

6.16.4 A Protest Fee becomes payable when a written Protest or Appeal is submitted to a Jury member, as follows:

a) Protest: 50,00 EUR;

b) Appeal of Protest Decision: 100,00 EUR;

c) The Protest Fee becomes payable when a completed Protest Form is delivered to a Jury Member and must be paid to the Jury Member or Organizing Committee as soon as possible; and

d) Protest fees must be returned if the Protest or Appeal is upheld, or will be retained by the Organizing Committee if the Protest or Appeal is denied.

EDITION 2017 | Second Print 01/2018
Copyright: ISSF

6.16.5 Scoring Protests

Decisions by the RTS Jury on the value or number of shots on a target are final and may not be appealed.

6.16.5.1 Scoring Protest Time

All scoring or results protests must be submitted within **10 minutes** after Preliminary Results are posted on the Range Scoreboard (Rule 6.4.2.i). The time when the Scoring Protest Time ends must be shown on the Range Scoreboard, when Preliminary Results are posted. The location to which any score protest must be made must be published in the Official Program.

6.16.5.2 EST Score Protests

If an athlete **protests the value of an indicated shot** on an EST, the protest will only be accepted when it is made before the next shot or series (25m events) is fired or within three (3) minutes after the last shot, however, this requirement does not apply in case of a failure of the paper or rubber band to advance or other target failures.

a) If a protest is made concerning the value of a shot, the athlete will be requested to fire another shot at the end of the competition, so that this extra shot may be counted if the protest is upheld and the correct value of the disputed shot cannot be determined;

b) If the RTS Jury determines that a protested shot scores within two (2) decimal rings of the value of an indicated shot, the protest must not be upheld;

c) If the protest concerning a shot value, other than zero (0) or failure to register, is not upheld, a two (2) point penalty from the score of the disputed shot will be awarded and the protest fee must be paid;

d) The team official or athlete has the right to know the resolution of the disputed shot; and

e) Shots on 50m EST with an indicated value of 9.5 or higher may not be protested in Elimination or Qualification Rounds; and

f) Score protests regarding the value or number of shots are not permitted in Finals (Rule 6.17.1.7).

Copyright: ISSF

6.16.6 Appeals

If there is a disagreement with a Jury decision, the matter may be appealed to the Jury of Appeal, except that decisions by a Finals Protest Jury (6.17.1.10 d) and decisions by the RTS Jury on the value or number of shots (6.16.5) are final and may not be appealed. Such appeals must be submitted in writing by the team leader or a representative not later than 30 minutes after the Jury decision has been announced. **The decision of the Jury of Appeal is final.**

6.16.7 **Copies of all decisions** regarding written protests and appeals must be forwarded by the Technical Delegate(s) to the ISSF Secretary General together with his Final Report for review by the appropriate Section and Technical Committees.

6.17 FINALS IN OLYMPIC RIFLE AND PISTOL EVENTS

6.17.1 General Finals Competition Procedures

6.17.1.1 **Qualification for Finals**. All athletes entered in an event will fire the Qualification course (Rule 3.3.2.3 and 3.3.4) to determine the finalists for that event. The eight (8) highest-ranking athletes in the Qualification advance to the Finals, except in 25m Rapid Fire Pistol Men, the six (6) highest-ranking athletes advance.

6.17.1.2 **Start Positions**. Start positions in Finals are assigned according to a random draw that is done automatically by the computer when the Finals Start List is released. 10m and 50m firing points must be labelled R1-A-B-C-D-E-F-G-H-R2. Targets for 25m Pistol Women Finals must be labelled A-B-R1-D-E/F-G-R2-I-J. The reserve targets are designated R1 and R2.

6.17.1.3 **Reporting and Start Times.** The Start Time for a Final is when the CRO begins the commands for the first MATCH shot/series. Athletes must report to the Finals Range Preparation Area at least 30 minutes before the Start Time. A two (2) point/hit penalty will be deducted from the score of the first MATCH shot/series if the athlete does not report on time. Athletes must report with their equipment including sufficient ammunition to complete the Final, competition clothing and a national team uniform that is appropriate to wear in the Victory Ceremony. The Jury must confirm that all finalists are present and that their names and nations are correctly recorded in the results system and on the scoreboards. Juries must complete equipment checks during the reporting period as soon as possible after the athlete reports.

6.17.1.4 **Late Arrival**. Any finalist who does not report to the preparation area within 10 min. after the Reporting Time may not start and will be recorded as the first eliminated athlete and shown as DNS. If a finalist does not report, the first elimination will begin with the seventh place, or fifth place for a 25m Rapid Fire Pistol Men Finals.

EDITION 2017 | Second Print 01/2018
Copyright: ISSF

6.17.1.5 **Scoring**. Qualification scores entitle an athlete to a place in a Final, but do not carry forward. Scoring in Finals starts from zero (0) in accordance with these rules. A deduction or penalty must be applied to the score of the MATCH shot/ series where the violation occurred. No score below zero (0) will be recorded (e.g. 3-1 point deduction = 2, 0-1 point deduction = 0).

6.17.1.6 **Malfunctions, 10m and 50m Finals.** If a finalist has an ALLOWABLE malfunction (Rule 6.13.2) during a single shot, a maximum of one (1) min. will be given to repair the malfunction or replace the gun, after which the athlete will be directed to repeat the shot. If a finalist has an ALLOWABLE malfunction in a 5-shot series and the malfunction can be repaired or the gun replaced within one (1) min., any shots fired in that series will be counted and the athlete will be permitted to complete the series within the time remaining when the malfunction was claimed plus additional time equal to the time required to repair the malfunction, but not exceeding one (1) min. Finalists may have only one ALLOWABLE MALFUNCTION per Final.

6.17.1.7 **Score Protests.** Score protests regarding the value or number of shots are not permitted in Finals.

Copyright: ISSF

6.17.1.8 **EST Complaints During Finals**

a) If a finalist complains that his target failed to register a shot during Sighting shots, the athlete must be directed to fire another shot at that target. If that shot registers, the Final will continue. If that shot does not register or if there is a complaint regarding the failure of a paper/rubber strip to advance, the CRO must command "STOP…UNLOAD" for all finalists and the athlete with the malfunctioning target must be moved to a reserve target. As soon as that athlete is in position on a spare target, the CRO will give all finalists two (2) minutes preparation time and then restart the Preparation and Sighting Time for the Final.

b) If there is a complaint concerning an unexpected zero (0) (missing shot) during a MATCH shot/series, the Jury (Jury Member-in-Charge, second Competition Jury Member and one RTS) must determine whether the missing shot actually was a miss (0) or if the target malfunctioned (the Jury may direct the CRO to stop firing so they can examine the target). Unless the Jury finds credible evidence that the shot missed the target, it shall direct the athlete to fire another competition shot (10m/50m), 25m Pistol Women series completion (one shot) or a 25m Rapid Fire Men series. If the extra competition shot registers, the value of that shot shall be counted in lieu of the unexpected zero (missing shot) and the Final shall continue. In a 25m Rapid Fire Men Final, the score of the repeat series shall count in lieu of the hit total of the original series.

c) If the shot fired on a target that had the unexplained miss does not register, the athlete must be moved to a reserve target (25m RFP to another target group). In 10m or 50m Finals, the athlete who was moved to a reserve target must be given two (2) minutes Preparation and Sighting Time. The athlete who is moved must, on command, be allowed to fire the missing competition shot, series completion or refire series (25m RFP) before competition firing continues for all athletes.

d) During any delay in competition firing, other finalists are permitted to do aiming exercises and dry fire. If the total delay to resolve the unexplained miss issue is longer than five (5) minutes, all athletes in 10m and 50m Finals must be given two (2) minutes Sighting time before competition firing resumes.

6.17.1.9 **Finals Range Equipment.** Finals Ranges must be equipped with electronic scoreboards that display ranked results for competition officials, athletes, coaches and spectators; a countdown clock visible to finalists and a speaker system. If a count-down clock is not visible to all finalists, all controlled times must be shown on monitors clearly visible to all finalists. Chairs must be provided for Jury Members on duty, Range Officers, coaches and eliminated athletes.

EDITION 2017 | Second Print 01/2018
Copyright: ISSF

6.17.1.10 **Finals Officials.** The conduct and supervision of Finals must be done by the following personnel:

a) CRO. An experienced Chief Range Officer with an ISSF A or B license must conduct Finals;

b) Competition Jury. The Competition Jury must supervise the conduct of Finals. The Jury Chairman must designate himself or one Jury Member as the Jury Member-in-Charge;

c) RTS Jury. One member of the RTS Jury must be present to oversee the Finals' results process;

d) Finals Protest Jury. One member of the Jury of Appeal, the Jury Member-in-Charge and one other member of the Competition Jury, as designated by the Technical Delegate and Jury Chairman, shall act as the Finals Protest Jury and must decide protests if any are made during a Final; no appeals against Finals Protest Jury decisions are permitted;

e) Range Officer (RO). One or two experienced Range Officer(s) will assist the CRO by checking guns for safety, escorting finalists and their coaches to and from the FOP and handling any malfunction claims during the Final;

f) Technical Officer(s). The Official Results Provider appoints the Technical Officer(s) to prepare and operate the ESTs and the graphic display of results and to consult with the Juries regarding any technical problems;

g) Announcer. An official designated by the ISSF or Organizing Committee must work with the CRO and be responsible for introducing finalists, announcing scores and providing information to spectators; and

h) Sound Technician. A qualified technical official must be available to operate the sound and music system during the Final.

6.17.1.11 **Finals Production and Music.** The conduct of Finals must use color, lighting, music, announcements, commentary, staging and CRO commands in a complete production that portrays the athletes and their competitive performances in the most appealing and exciting ways to spectator and television audiences.

6.17.1.12 **Presentation of Finalists.** After the Sighting Period or Series, Rifle finalists may remain in position, but must lower their rifles from their shoulders and turn their heads towards spectators and the TV camera. All Pistol finalists must place their guns down and turn to face the audience. The Announcer will introduce finalists by giving the name, nation and brief information about each Finalist. The Announcer must also introduce the CRO and Jury Member-in-Charge.

Copyright: ISSF

6.17.1.13 **Finals Rules and Procedures.**

a) ISSF General Technical Rules or the Technical Rules for each event apply in all cases not covered by Rule 6.17.

b) After reporting to the Preparation Area, finalists or their coaches must be allowed to place their guns and equipment on their firing points at least 18:00 min. before the Final start time (15:00 min. before for 25m Pistol Finals). Gun cases and equipment containers must not be left on the FOP. Athletes and coaches must then return to the Preparation Area to be called to the firing line for their warm-up period and presentation.

c) When Rifle finalists are called from the Preparation Area to the firing line, they must walk to the line fully dressed with trousers and jackets closed.

d) After finalists are called to the line, they may handle their guns, get into firing positions and do holding or aiming exercises but they may not remove safety flags or dry fire until the **"PREPARATION AND SIGHTING TIME…START"** command or **"PREPARATION BEGINS NOW"** (25m Pistol) command.

e) In Finals, dry firing is permitted only during a Preparation and Sighting Time, Changeover and Sighting Times or a Preparation Period, except that dry firing during 25m Rapid Fire Pistol Finals is permitted in accordance with 6.17.4. Dry firing, at any other time must be penalized with a one (1) point deduction in 10m and 50m Finals and a one (1) hit deduction in 25m Pistol Finals.

f) No finalist is permitted to load a rifle or pistol until the CRO gives the command "**LOAD**" or „**START**". This means that for the Preparation and Sighting Time, where there is no "**LOAD**" command, **"START"** is also an authorization to load. Loading is defined as bringing a cartridge or pellet or magazine with cartridges into contact with the gun (see 6.2.3.4).

g) In Finals, holding and aiming exercises are permitted from the time finalists are called to the line (**"ATHLETES TO THE LINE"** command) until the **"STOP… UNLOAD"** command at the end of the Final is given, except that holding and aiming exercises may not be done during the presentations.

h) If a finalist in a 10m, 25m or 50m Final loads and fires a shot before the **"PREPARATION AND SIGHTING TIME…START"** command or before the **"FOR THE SIGHTING SERIES…LOAD"** command, he must be disqualified.

i) If a finalist fires a shot after the **"PREPARATION AND SIGHTING TIME… STOP"** command or the **"CHANGE-OVER AND SIGHTING TIME…STOP"** command and before the **"START"** command for the next competition series, the shot must not be counted as a MATCH shot and a two (2) point penalty must be applied to the first MATCH shot.

EDITION 2017 | Second Print 01/2018
Copyright: ISSF

j) If a finalist in a 25m Rapid Fire Pistol Men Final fires a shot before the green light for a series comes on, the entire series must be scored as zero (0) hits. If a finalist in a 25m Pistol Women Final fires a shot before the green light for a shot comes on, that shot will be scored as a miss and a one (1) hit penalty will be deducted from the score of the series.

k) If a finalist fires an extra shot in a series or single shot time, the extra shot must be nullified and a two (2) point/hit penalty must be applied to the last correct shot.

l) If a finalist who is not involved in a shoot-off or malfunction completion/refire loads and fires a shot that shot must be nullified. There is no penalty for this inadvertent mistake.

m) Safety flags must remain inserted in finalists' guns until the Preparation and Sighting Time starts. Safety flags must be inserted during the presentation and when an athlete is eliminated or the Final concludes. Athletes who are eliminated during a Final must place their guns down on the firing point, bench or equipment box (3-Position Finals) with actions open and muzzles pointed downrange, with safety flags inserted. A Range Officer must check all guns to make sure safety flags are inserted. Medal winners may pose with their guns immediately after the Finals, but no guns may be removed from the firing points until safety flags are inserted and checked by a Range Officer. If an athlete inadvertently fails to insert a safety flag, a Range Officer is authorized to correct the fault and insert a safety flag.

n) Non-verbal coaching is permitted during all Finals. Verbal coaching is permitted only during 3-Position Rifle Final changeover times.

6.17.1.14 **Presentation of Medalists.** After the CRO declares **"RESULTS ARE FINAL,"** the Jury must assemble the three medalists on the FOP and the Announcer must recognize the medal winners by announcing:

"THE BRONZE MEDAL WINNER, REPRESENTING (NATION), IS (NAME)"

"THE SILVER MEDAL WINNER, REPRESENTING (NATION), IS (NAME)"

"AND THE GOLD MEDAL WINNER, REPRESENTING (NATION), IS (NAME)"

6.17.2 FINALS – 10m AIR RIFLE AND 10m AIR PISTOL, MEN AND WOMEN

NOTE: Timings in this rule are provided as guidelines. For detailed timings for the conduct of Finals, check the "Commands and Announcements for Finals" documents that are available from ISSF Headquarters.

Copyright: ISSF

a) **FINALS FORMAT**	The Final consists of two (2) series of five (5) MATCH shots each fired in a time of 250 sec. per series (5 + 5 shots). This is followed by fourteen (14) single MATCH shots each fired on command in a time of 50 sec.. Eliminations of the lowest scoring finalists begin after the 12th shot and continue after every two shots until the gold and silver medals are decided. There are a total of twenty-four (24) shots in the Final.
b) **SCORING**	Scoring in Finals is done with tenth-ring (decimal) scoring. Cumulative total scores in a Final determine final rankings, with ties broken according to shoot-off scores. Deductions for violations occurring before the first MATCH shot will be applied to the score of the first MATCH shot. Deductions for other penalties will be applied to the score of the shot where the violation occurred.
c) **EQUIPMENT SET-UP TIME** **18:00 min before**	Finalists or their coaches must be allowed to place guns and equipment on their firing points not less than 18 min. before the Start Time.
d) **WARM-UP PERIOD** **13:00 min before**	The CRO will call finalists to the firing line thirteen (13) minutes before the start time by commanding **"ATHLETES TO THE LINE."** After two (2) min., the CRO will start a combined Preparation and Sighting Time by commanding **"FIVE (5) MINUTES PREPARATION AND SIGHTING TIME…START."** During this time, finalists may fire unlimited sighting shots. At 30 sec. before the end of the Preparation and Sighting Time, the CRO will command **"30 SECONDS."** After five (5) minutes, the CRO will command **"STOP…UNLOAD."** No score announcements are made during sighting shots.
e) **PRESENTATION OF FINALISTS** **5:30 min. before**	After the command **"STOP…UNLOAD,"** Rifle finalists must unload their rifles and insert safety flags. Rifle finalists may remain in position during the presentations, but they must lower their rifles from their shoulders and are expected to turn their heads and faces towards spectators and the TV camera used to show the presentations. All finalists' rifles must remain down, out of their shoulders, until the presentation of all finalists is finished. After the command **"STOP…UNLOAD,"** Pistol finalists must unload their pistols, insert safety flags, place them on the bench and turn to face spectators for the presentation. A Range Officer must verify that gun actions are open with safety flags inserted. After finalists' guns are checked, the Announcer will introduce the finalists, CRO and Jury Member-in-Charge according to Rule 6.17.1.12.
f) **FINAL PREPARATION TIME**	Immediately after the presentation, the CRO will command **"TAKE YOUR POSITIONS."** The targets and scoreboard must be cleared for MATCH shots. After 60 sec., the CRO will begin commands for the first MATCH series.

EDITION 2017 | Second Print 01/2018
Copyright: ISSF

g) **1st COMPETITION STAGE** **2 x 5 Shots** **Time limit: 250 sec. for each series** **Competition firing starts at 0:00 min.**	The CRO will command **"FOR THE FIRST COMPETITION SERIES… LOAD."** After 5 sec., the CRO will command **"START."** Finalists have 250 sec. to fire five (5) shots. At 250 sec. or after all finalists have fired five (5) shots, the CRO will command **"STOP."** Immediately after the command **"STOP,"** the Announcer will give 15-20 sec. of comments on the current ranking of the athletes and notable scores. Individual shot scores are not announced. Immediately after the Announcer finishes, the CRO will command **"FOR THE NEXT COMPETITION SERIES, LOAD."** After 5 sec., the CRO will command **"START."** At 250 sec. or after all finalists have fired five (5) shots, the CRO will command **"STOP."** The Announcer will again comment on the athletes and their scores and explain that single shots will begin and that after each second shot, the lowest ranking finalist will be eliminated.
h) **2nd COMPETITION STAGE** **SINGLE SHOTS** **14 x 1 Shot** **Time limit: 50 sec. for each shot**	Immediately after the Announcer finishes, the CRO will command **"FOR THE NEXT COMPETITION SHOT, LOAD."** After 5 sec., the CRO will command **"START."** Finalists have 50 sec. to fire each shot. At 50 sec., the CRO will command **"STOP"** and the Announcer will give comments about the Finalists and their scores. Immediately after the Announcer finishes, the CRO will command **"FOR THE NEXT COMPETITION SHOT, LOAD."** After 5 sec., the CRO will command **"START."** This sequence will continue until 24 total shots (two 5-shot series and 14 single shots), are fired. At the end of the 24th shot, the CRO will command **"STOP…UNLOAD."** A Range Officer must verify that gun actions are open with safety flags inserted.
i) **ELIMINATIONS**	After all Finalists have fired twelve (12) shots, the lowest ranking athlete is eliminated (8th place). The lowest ranked finalists will continue to be eliminated as follows: After 14 shots – 7th place After 16 shots – 6th place After 18 shots – 5th place After 20 shots – 4th place After 22 shots – 3rd place (bronze medal winner is decided) After 24 shots – 2nd and 1st places (silver and gold medal winners are decided)

Copyright: ISSF

j) **TIE-BREAKING**	If there is a tie for the lowest ranking athlete to be eliminated, the tied athletes will fire an additional tie-breaking single shot(s) until the tie is broken. For the tie-breaking shot, the CRO will immediately announce the family names of the tied athletes and command them to fire the tie-breaking shot(s) with the normal firing procedure. The Announcer will make no comments until the tie is broken.
k) **FINALS COMPLETION**	After the two (2) remaining finalists fire their 24th shots, and if there are no ties or protest, the CRO will command **"STOP…UNLOAD"** and the declare **"RESULTS ARE FINAL."** The Jury must assemble the three medalists on the FOP and the Announcer will immediately recognize the bronze, silver and gold medal winners according to 6.17.1.14.

EDITION 2017 | Second Print 01/2018
Copyright: ISSF

6.17.3 FINALS – 50m RIFLE 3-POSITIONS MEN AND WOMEN

a) **FINALS FORMAT**	The Final consists of 15 MATCH shots in each position, kneeling, prone and standing, fired in that order. The Final starts with 3 x 5 shots kneeling with a time limit of 200 sec. per series. After a seven (7) min. Changeover and Sighting Time, finalists fire 3 x 5 shots prone with a time limit of 150 sec. per series. After a nine (9) min. Changeover and Sighting Time, finalists fire 2 x 5 shots standing in 250 sec. per series. The two (2) lowest ranking finalists are eliminated after 10 (2 x 5) shots standing. The Final continues with five (5) single shots in standing, each in 50 sec., with the lowest ranking athlete being eliminated after each shot until two (2) athletes remain to fire the last shot and decide the gold medal winner. There are a total of 45 shots in the Final.
b) **SCORING**	Scoring is done with tenth-ring (decimal) scoring. Cumulative total scores in the Final determine final rankings, with ties broken according to shoot-off scores. Deductions for violations occurring before the first competition shot will be applied to the score of the first competition shot. Deductions for other penalties will be applied to the score of the shot where the violation occurred.
c) **EQUIPMENT SET-UP TIME** **20:00 min before**	Athletes or athletes' coaches must be allowed to place rifles and equipment on the firing points not less than 18 min. before the Start Time. All rifle accessories and equipment needed to complete position changes must be kept in a single container that remains on the athlete's firing point during the Final.
d) **PREPARATION AND SIGHTING** **KNEELING POSITION** **13:00 min. before**	The CRO will call finalists to the firing line thirteen (13) minutes before the Start Time by commanding **"ATHLETES TO THE LINE."** After being called to the line, finalists may handle their rifles, get into the kneeling position and do holding or aiming exercises, but they may not remove safety flags or dry fire. After two (2) min., the CRO will start a combined Preparation and Sighting Time by commanding **"FIVE MINUTES PREPARATION AND SIGHTING TIME…START."** After this command, finalists may remove safety flags, dry fire and fire unlimited sighting shots. At 30 sec. before the end of the Preparation and Sighting Time, the CRO will command **"30 SECONDS."** After five (5) min., the CRO will command **"STOP… UNLOAD."** No score announcements are made during sighting shots. After the command **"STOP…UNLOAD,"** finalists must unload their rifles and insert safety flags for the presentation of the finalists. A Range Officer must verify that rifle actions are open with safety flags inserted. Athletes may remain in position during 3-Position Final presentations, but they must lower their rifles from their shoulders and turn their heads and faces towards spectators and the TV camera used to show the presentations.
e) **PRESENTATION OF FINALISTS** **5:30 min. before**	After finalists' rifles are checked, the Announcer will present the finalists, CRO and Jury Member-in-Charge according to Rule 6.17.1.12. All finalists' rifles must remain down, out of their shoulders, until the presentation of all Finalists is finished.

Copyright: ISSF

f) **KNEELING POSITION MATCH FIRING** **3 x 5-shot series** **Time limit: 200 sec. for each series** **Competition firing starts at 0:00 min.**	Immediately after the presentation, the CRO will command **"TAKE YOUR POSITIONS,"** pause 60 seconds and then command **"FOR THE FIRST COMPETITION SERIES… LOAD."** After five (5) sec., the CRO will command **"START."** Finalists have 200 sec. to fire each five (5) shot MATCH series in kneeling. At 200 sec. or after all finalists have fired five (5) shots, the CRO will command **"STOP."** Immediately after the command **"STOP,"** the Announcer will give 15-20 sec. of comments on the current ranking of the athletes and notable scores. Individual shot scores are not announced. Immediately after the Announcer finishes, the CRO will command **"FOR THE NEXT COMPETITION SERIES, LOAD."** After five (5) sec., the CRO will command **"START."** At 200 sec. or after all finalists have fired five (5) shots, the CRO will command **"STOP."** Immediately after the command **"STOP,"** the Announcer will give 15-20 sec of additional comments on the rankings. Immediately after the Announcer finishes, the CRO will command **"FOR THE NEXT COMPETITION SERIES, LOAD."** After five (5) sec., the CRO will command **"START."** At 200 sec. or after all finalists have fired five (5) shots, the CRO will command **"STOP…UNLOAD."** A Range Officer must verify that rifle actions are open with safety flags inserted.
g) **CHANGEOVER AND SIGHTING** **PRONE POSITION** **7:00 Minutes**	Immediately after the command **"STOP…UNLOAD,"** the CRO must start a combined Changeover and Sighting Time by commanding **"SEVEN MINUTES CHANGEOVER AND SIGHTING TIME…START."** After this command, finalists may handle their rifles to prepare them for the prone position, get into the prone position, remove safety flags, dry fire and fire unlimited sighting shots. After the changeover has begun, the announcer will make comments about the rankings and scores of the finalists after the kneeling position. At 30 sec. before the end of the Changeover and Sighting Time, the CRO will command **"30 SECONDS."** After seven (7) minutes, the CRO will command **"STOP."** This will be followed by a 30 sec. pause when the Technical Officer clears the targets for MATCH firing.

EDITION 2017 | Second Print 01/2018
Copyright: ISSF

h) **PRONE POSITION MATCH FIRING** **3 x 5-shot series** **Time limit: 150 sec. for each series**	After 30 sec., the CRO will command **"FOR THE NEXT COMPETITION SERIES…LOAD."** After five (5) sec, the CRO will command **"START."** Finalists have 150 sec. to fire each 5-shot MATCH series in prone. The same command procedure and sequence of announcements will continue until finalists complete 3 x 5 shots in the prone position. After the third series, the CRO will command **"STOP…UNLOAD."** A Range Officer must verify that rifle actions are open with safety flags inserted.
i) **CHANGEOVER AND SIGHTING** **STANDING POSITION** **9:00 Minutes**	Immediately after the command **"STOP…UNLOAD,"** the CRO must start a combined Changeover and Sighting Time by commanding **"NINE MINUTES CHANGEOVER AND SIGHTING TIME…START."** After this command, finalists may handle their rifles to prepare them for the standing position, get into the standing position, remove safety flags, dry fire and fire unlimited sighting shots. After the changeover has begun, the announcer will make comments about the rankings and scores of the finalists after the kneeling and prone positions. At 30 sec. before the end of the Changeover and Sighting time, the CRO will command ***"30 SECONDS."*** After nine (9) minutes, the CRO will command **"STOP."** This will be followed by a 30 sec. pause when the Technical Officer clears the targets for MATCH firing.
j) **STANDING POSITION MATCH FIRING** **2 x 5-shot series** **5 x 1 shots** **Time limit: 250 sec. for each 5-shot series, 50 sec. for each single shot**	After 30 sec. the CRO will command **"FOR THE NEXT COMPETITION SERIES…LOAD."** After five (5) sec, the CRO will command **"START."** Finalists have 250 sec. to fire each 5-shot MATCH series in standing. The same command procedure and sequence of announcements will continue until the finalists have completed two (2) 5-shot series in the standing position. After the CRO commands **"STOP"** for the second series, the 8th and 7th place finalists are eliminated. The Announcer will recognize the athletes who are eliminated and comment on the results. Immediately after the Announcer finishes, the CRO will command **"FOR THE NEXT COMPETITION SHOT, LOAD."** After five (5) sec., the CRO will command **"START."** Finalists have 50 sec. to fire each single shot. Shot time countdown information must continue to be available to the athletes. At 50 sec. or after all finalists fire one (1) shot, the CRO will command **"STOP."** The Announcer will recognize the athlete who is eliminated and comment on the results. The CRO and Announcer will continue this command and announcement sequence until the last shot decides the gold and silver medal winners.

Copyright: ISSF

k) **ELIMINATIONS**	The two (2) lowest-ranking finalists are eliminated after the second standing series (40 shots total, 8th and 7th places). One (1) additional lowest-ranking athlete is eliminated after each of the five single shots that follow. After 41 shots – 6th place After 42 shots – 5th place After 43 shots – 4th place After 44 shots – 3rd place (bronze medal winner is decided) After 45 shots – 2nd and 1st places (silver and gold medal winners are decided).
l) **TIE-BREAKING**	If there is a tie for the lowest ranking athlete to be eliminated, the tied athletes will fire an additional tie-breaking shot(s) until the tie is broken. For tie-breaking shots, the CRO will immediately announce the family names of the tied athletes and their firing points and command them to fire their tie-breaking shots with the normal firing procedure. The Announcer will make no comments until the tie is broken. If the athletes in 7th and 8th place are tied, the tie will be broken according to the highest score in the last 5-shot series and then the next to the last 5-shot series, etc.
m) **FINALS COMPLETION**	After the two (2) remaining finalists fire the last shot, and if there are no ties or protest, the CRO will command **"STOP…UNLOAD"** and the declare **"RESULTS ARE FINAL."** The Jury must assemble the three medalists on the FOP and the Announcer will immediately recognize the bronze, silver and gold medal winners according to 6.17.1.14.
n) **CHANGEOVER**	Athletes may not begin their changeover to the next position until the CRO gives the command **"START"** for the Changeover and Sighting Time is given. A warning will be given for the first violation. A two-point penalty applied on the first shot of the next series will be given for a second violation.
o) **COACHING**	Coaches may assist finalists by bringing equipment to the firing line before the Final or removing equipment after the Final. Coaches may not assist athletes during the changeovers. Non-verbal coaching is permitted; verbal coaching is only permitted during the changeover times, if the athlete steps back to the coach (the coach may not go to the athlete).

EDITION 2017 | Second Print 01/2018
Copyright: ISSF

6.17.4 FINALS – 25m RAPID FIRE PISTOL MEN

a) **FINALS FORMAT**	The 25m Rapid Fire Pistol Men Final consists of eight (8) 5-shot 4-second series with hit or miss scoring and the elimination of the lowest scoring finalists, beginning after the fourth series and continuing until the eighth series when the gold and silver medals are decided.
b) **TARGETS**	Three (3) groups of five (5) 25m ESTs must be used. Two finalists are assigned to each group. The 1.50 m x 1.50 m shooting station (firing point) for each group is used. They must take their positions on the left and right sides of the shooting station so that at least one (1) foot touches the line that marks the left or right side of the shooting station as defined by Rule 6.4.11.7.
c) **SCORING**	Scoring in the Final is hit or miss; each hit counts one (1) point; each miss counts zero (0) points. Any shot scoring 9.7 or higher on the 25m Rapid Fire Pistol target counts as a hit. Cumulative total scores (total number of hits) in the Final determine final rankings, with ties broken according to shoot-off scores.
d) **REPORTING TIME** **30:00 and 15:00 min before**	Athletes must report 30 min. before the Start Time with their equipment and competition clothing. The Jury must complete equipment checks as soon as possible after the athlete reports. Athletes or their coaches must be allowed to place their equipment, including sufficient ammunition to complete the Final, on their firing points not less than 15 min. before the Start Time. Athlete equipment may include a reserve pistol that can be used to replace a malfunctioning pistol (safety flag must be inserted).

Copyright: ISSF

e) **CALL TO LINE, PREPARATION PERIOD AND SIGHTING SHOTS** **10:00 min. before**	The CRO will call the **"ATHLETES TO THE LINE"** ten (10) min. before the Start Time. After one (1) min., the CRO will begin the two (2) min. preparation period by commanding **"PREPARATION BEGINS NOW."** After two (2) min., the CRO will command **"END OF PREPARATION."** The Sighting Series consists of five (5) shots in four (4) seconds. Immediately after the preparation period, the CRO will command **"FOR THE SIGHTING SERIES, LOAD."** 30 sec. after the command **"LOAD,"** the CRO will call the name of the first (left) athletes in each group by stating **"(FAMILY NAME OF ATHLETE #1, FAMILY NAME OF ATHLETE #3, FAMILY NAME OF ATHLETE #5)."** After the athletes' names are announced, they are allowed to place magazines in their pistols and prepare to fire. 15 sec. after calling the names of finalists 1, 3 and 5, the CRO will command **"ATTENTION"** and turn the red lights on. These athletes must bring their pistols to the READY position (see 8.7.2). The green lights will come on after seven (7) sec. After the four (4) sec. firing period, the red lights will come on for 10-14 sec. (while targets are prepared for the next series). During this 10-14 sec. period, athletes may view their monitors. After the Technical Officer signals that the targets are ready, the CRO will announce **"(FAMILY NAME OF ATHLETE #2, FAMILY NAME OF ATHLETE #4, FAMILY NAME OF ATHLETE #6)."** After the athletes' names are announced, they may put magazines in their pistols and prepare to fire. Fifteen (15) sec. later, the command **"ATTENTION"** will be given and the timing procedure for that series will proceed. After the four (4) sec. firing period, the red lights will come on for 10-14 sec. During this 10-14 sec. period, athletes may view their monitors. No score announcements will be made for the sighting series. After all finalists complete their sighting series, they must place their unloaded pistols with safety flags inserted on the bench and turn to face the spectators for the presentation. A Range Officer must verify that pistol actions are open and there are no cartridges in the chambers or magazines.
f) **PRESENTATION OF FINALISTS** **4:45 min. before**	After finalists' pistols are checked, the Announcer will introduce the athletes, CRO and Jury Member-in-Charge according to Rule 6.17.1.12.

EDITION 2017 | Second Print 01/2018
Copyright: ISSF

g) **DETAILED PROCEDURE FOR COMMANDS AND FIRING** **Competition firing starts at 0:00 min.**	Each Final MATCH series consists of five (5) shots in four (4) seconds. For each series, all finalists remaining in the competition will shoot separately and in succession. The order of firing for all series is from left to right. Immediately after the presentation, the CRO will command **"TAKE YOUR POSITIONS."** 15 sec. after the presentation, the CRO will command **"LOAD."** After the command **"LOAD,"** athletes have one (1) min. to load two (2) magazines (Rule 8.7.6.2 d does not apply in a Final). Only one (1) **"LOAD"** command is given before the start of the first MATCH series. During the entire Final, athletes may continue to load magazines as required. After the command **"LOAD,"** athletes may do aiming exercises, arm lifts or dry firing, except when the other athlete in the 5-target group is firing. During this time the athlete on the right in the 5-target group may take his pistol in his hand to prepare, but he may not do aiming exercises, arm lifts or dry firing. After the athlete on the left has fired, he must place his pistol down and step to the rear of the shooting station or not move while the athlete on the right fires his series. One (1) min. after the command **"LOAD,"** the CRO will call the name of the first athlete by stating **"(FAMILY NAME OF ATHLETE #1)."** After the athlete's name is announced, he may put the magazine in his pistol and prepare to fire. 15 sec. after calling the name of the first athlete, the CRO will command **"ATTENTION"** and turn the red lights on. The first athlete must bring his pistol to the READY position. The green lights will come on after a delay of seven (7) sec. After the four (4) sec. firing period, the red lights will come on for 10-14 sec. (recycling time of the targets). During this 10-14 sec. period, the CRO will report the score for that series (e.g. **"FOUR HITS"**). Immediately after the first athlete's score is announced and the Technical Officer signals that the targets are ready, the CRO will announce **"(FAMILY NAME OF ATHLETE #2)."** 15 sec. later, the command **"ATTENTION"** will be given and the timing procedure for that series will proceed. After that series, the CRO will report the score. The other athletes will continue to fire in order until all athletes remaining in the competition have fired that series. There will be a 15-20 sec. pause after all athletes complete one (1) series. During this pause, the Announcer will comment on the current ranking of the athletes, the best scores, athletes who were eliminated, etc. For the second series, the CRO will announce **"(FAMILY NAME OF ATHLETE #1)"** and continue this procedure until all finalists have fired four (4) series.

Copyright: ISSF

h) **ELIMINATIONS**	After all finalists fire the fourth series, the lowest-ranking athlete is eliminated (6th place). One (1) additional athlete is eliminated after each series that follows. After 5 series – 5th place After 6 series – 4th place After 7 series – 3rd place (bronze medal winner is decided) After 8 series – 2nd and 1st places (silver and gold medal winners are decided.)
i) **TIE-BREAKING**	If there is a tie for the lowest ranking athlete to be eliminated, the tied athletes will fire additional tie-breaking four (4) sec. series until the tie is broken. For all tie-breaking series, the athlete on the left starts. For the tie-breaking series, the CRO will immediately call the name of the first tied athlete by stating **"(FAMILY NAME OF ATHLETE #1)"** and the normal firing procedure applies. The Announcer will make no comments until the tie is broken.
j) **FINALS COMPLETION**	After the two (2) remaining finalists fire the eighth series, and if there are no ties or protest, the CRO will command **"STOP…UNLOAD"** and the declare **"RESULTS ARE FINAL."** The Jury must assemble the three medalists on the FOP and the Announcer will immediately recognize the bronze, silver and gold medal winners according to 6.17.1.14. Before any finalist or his coach may remove a pistol from the firing line, the Range Officer must check the pistol to be sure its action is open with a safety flag inserted, magazine removed and magazines unloaded. Pistols must be boxed before they are taken from the firing line.
k) **LATE SHOTS**	If an athlete fires a late shot or does not shoot at all five (5) targets in time, a deduction of one (1) hit for each overtime or unfired shot will be taken from the score for that series. The shot(s) will be marked with "OT."
l) **READY POSITION (8.7.2, 8.7.3)**	If the Jury determines that an athlete raises his arm too soon, or does not lower it sufficiently, the athlete must be penalized by a deduction of two (2) hits in that series **(Green Card)**. In a Final, no warning will be given. In case of repetition, the athlete must be disqualified (red card). To decide a READY position violation, at least two Competition Jury Members must give a sign (e. g. raising a flag) showing that an athlete raised his arm too quickly before a penalty or disqualification is imposed.
m) **MALFUNCTIONS (8.9)**	Malfunctions during the sighting series may not be claimed or refired. Only one malfunction (ALLOWABLE or NON-ALLOWABLE) may be claimed during the MATCH series. If a malfunction occurs during a MATCH series, a Range Officer must determine if the malfunction is ALLOWABLE or NON-ALLOWABLE. If the malfunction is ALLOWABLE, the athlete must repeat the series immediately, while the other finalists standby, and will receive the score of the repeat series. The athlete has 15 seconds to be ready for the repeat series. For any further malfunction, no repeat series is permitted and the hits that are displayed will be counted. If the malfunction is NON-ALLOWABLE, a penalty of two (2) hits must be deducted from the score for that series.

EDITION 2017 | Second Print 01/2018
Copyright: ISSF

6.17.5 FINALS – 25m PISTOL WOMEN

a) **FINALS FORMAT**	The 25m Pistol Women Final consists of ten (10) 5-shot rapid-fire series with hit or miss scoring and the eliminations of the lowest scoring finalists, beginning after the fourth series and continuing until the tenth series when the gold and silver medals are decided.
b) **TARGETS**	Two (2) groups of five (5) 25m ESTs must be used. The targets are labeled A-B-R1-D-E-F-G-R2-I-J. In the Final, eight (8) finalists are assigned to positions A-B-D-E-F-G-I-J according to a random draw.
c) **SCORING**	The Final starts from zero (0). Scoring is hit or miss; each shot within the hit zone is scored as one hit. Any shot scoring 10.2 or higher on the 25m Rapid Fire Pistol target counts as a hit. During the Final, results are cumulative with each athlete's final ranking determined by the total number of hits. If two or more athletes are tied for a place to be decided, they will fire additional series until the tie is broken.
d) **REPORTING TIME** **30:00 and 15:00 min. before**	Athletes must report at least 30 min. before the Start Time with their equipment and competition clothing. The Jury must complete equipment checks as soon as possible after each athlete reports. Athletes or their coaches must be allowed to place their equipment, including sufficient ammunition to complete the Final, on their firing points not less than 15 min. before the Start Time. Athlete equipment may include a reserve pistol that can be used to replace a malfunctioning pistol (safety flag must be inserted).
e) **CALL TO LINE, PREPARATION PERIOD AND SIGHTING SHOTS** **12:00 min. before**	The CRO will call **"ATHLETES TO THE LINE"** twelve (12) min. before Start Time. After one (1) minute, the CRO will start the two (2) min. preparation period with the command **"PREPARATION BEGINS NOW."** After two (2) min., the CRO will command **"END OF PREPARATION."** The sighting series consists of five (5) shots fired in the standard Rapid Fire sequence (Rule 8.7.6.4). Immediately after the preparation period, the CRO will command **"FOR THE SIGHTING SERIES, LOAD."** After this command athletes may place loaded magazines in their pistols and prepare to fire. 60 seconds after the command **"LOAD,"** the CRO will command **"ATTENTION"** and turn the red lights on. Athletes must bring their pistols to the READY position (Rule 8.7.2). After seven (7) sec. the first three (3) sec. green lights will come on. After the series, the CRO will command **"STOP…UNLOAD."** No score announcements are made after the sighting series. After the commands **"STOP…UNLOAD,"** Finalists must unload their guns, insert safety flags, lay them down or place them on the bench and turn to face spectators for the presentation. A Range Officer must verify that pistol actions are open with safety flags inserted.
f) **PRESENTATION OF FINALISTS** **6:15 min. before**	After Finalists' guns are checked, the Announcer will present the athletes, CRO and Jury Member-in-Charge according to Rule 6.17.1.12.

Copyright: ISSF

g) **DETAILED PROCEDURE FOR COMMANDS AND FIRING** **Competition firing starts at 0:00 min.**	Immediately after the presentation, the CRO will command **"TAKE YOUR POSITIONS."** 15 sec. later, the first MATCH series will start and the CRO will command **"LOAD."** Finalists have one (1) min. to load two (2) magazines (Rule 8.7.6.2 d. does not apply for the Final). Only one (1) **"LOAD"** command is given before the start of the first MATCH series. During the entire Final, athletes may continue to load magazines as required. One (1) min. after the command **"LOAD,"** the CRO will command **"FIRST SERIES…READY."** After this command, athletes are allowed to place magazines in their pistols and prepare to fire. 15 sec. after the command **"READY,"** the CRO will command **"ATTENTION"** and turn the red lights on. Athletes must bring their pistols to the READY position (Rule 8.7.2). After seven (7) sec., the green lights will come on for the first three (3) sec. rapid-fire series. After the series is completed, the CRO will command **"STOP."** After the command **"STOP,"** the Announcer will give comments about the finalists' rankings and scores. 15 sec. after the Announcer finishes, the CRO will command **"NEXT SERIES…READY."** After 15 sec., the CRO will command **"ATTENTION."** This sequence will continue until all finalists fire four (4) series. After the fourth series, and if there are no ties involving eighth place, the CRO will command **"STOP."**
h) **ELIMINATIONS**	After all finalists fire the fourth series, the lowest-ranking athlete is eliminated (8th place). One (1) additional athlete is eliminated after each subsequent series: After 5 series – 7th place After 6 series – 6th place After 7 series – 5th place After 8 series – 4th place After 9 series – 3rd place (bronze medal winner) After 10 series - 2nd and 1st places (silver and gold medal winners) are decided
i) **TIE-BREAKING**	If two (2) or more athletes have the same score (total hits) for a place to be eliminated, tied athletes must fire additional tie-breaking 5-shot rapid-fire series until the tie is broken. If there is a tie, the CRO will immediately announce the family names of the tied athletes and command them to fire the tie-breaking series with the normal firing procedure. The Announcer will make no comments until the tie is broken.

EDITION 2017 | Second Print 01/2018
Copyright: ISSF

j) **FINALS COMPLETION**	After the tenth series, and if there are no ties involving 1st and 2nd places, the CRO will command **"STOP…UNLOAD"** and **"RESULTS ARE FINAL."** The Jury must assemble the three medalists on the FOP and the Announcer will immediately recognize the bronze, silver and gold medal winners according to 6.17.1.14.
k) **READY POSITION (8.7.2)**	If the Competition Jury determines that an athlete raises her arm too soon, or does not lower it sufficiently, the athlete must be penalized by a deduction of two (2) hits in that series (Green Card). In a Final, no warning will be given. In case of a second violation in a Final, the athlete must be Disqualified (Red Card). To decide a READY position violation, at least two Competition Jury Members must give a sign (e. g. raising a flag or card) showing that an athlete raised her arm too quickly before a penalty or disqualification is imposed.
l) **MALFUNCTIONS (8.9.1)**	Malfunctions during the Sighting series may not be claimed or completed. Only one malfunction (ALLOWABLE or NON-ALLOWABLE) may be claimed during a Final. If a malfunction occurs during a MATCH series, a Range Officer must determine if the malfunction is ALLOWABLE or NON-ALLOWABLE. If the malfunction is ALLOWABLE, the athlete must complete the series immediately while the other finalists stand by. The athlete has 15 sec. to be ready for the series completion. For any further malfunctions, no series completion is permitted and the hits that are displayed will be counted.

6.17.6 Protests in Finals

a) Any protests in a Final must be verbal and immediate. Protests are made by the athlete or his coach by holding up his hand;

b) There is no protest fee for a protest in a Final.

c) Any protest must be decided immediately by the Finals Protest Jury (3.12.3.7, 6.16.6 and 6.17.1.10.d.). A decision by the Finals Protest Jury is final and may not be appealed; and

d) If a protest in a Final is not upheld, a penalty of two points or two hits must be deducted from the score of the last shot or series.

6.17.7 Victory Ceremonies

A Victory **Ceremony** to honor gold, silver and bronze medal winners must be conducted as soon as possible after each Final in accordance with Rule 3.8.5. ISSF standards for the conduct of Award Ceremonies are provided in the document ***Guidelines for Accreditation, Finals Ranges and Award Ceremonies*** that is available from ISSF Headquarters.

Copyright: ISSF

6.18 AIR RIFLE AND AIR PISTOL MIXED TEAM EVENTS

6.18.1 General Competition Procedures

6.18.1.1 Events.

This Rule (6.18) provides special technical rules for these events:

a) 10m Air Rifle Mixed Team and Mixed Team Junior

b) 10m Air Pistol Mixed Team and Mixed Team Junior

6.18.1.2 Team Composition.

Mixed teams must be national teams (no mixed nations) with two team members, one male and one female. Both team members should wear matching competition clothing with national colors and identification.

6.18.1.3 Team Entries.

Nations may enter a maximum of two teams in one Championship. The entry fee for each team is EUR 170.00 (3.7.4.1). Team members may be changed for other athletes registered in the Championship not later than 12:00 hours before the second day before the day of the Mixed Team competition.

6.18.1.4 Competition Format.

10m Mixed Team events will be conducted in two stages:

a) QUALIFICATION

b) FINAL

6.18.1.5 Team Scores.

Team scores and rankings in Mixed Teams events are based on the total scores of the two team members.

6.18.1.6 Coaching.

During the Qualification, coaching will be governed by 6.12.5 (non-verbal coaching is allowed). During the Final, when Announcer commentary is taking place, each coach may approach and speak with his team members on their firing points one time (once per Final) for a maximum of 30 seconds. The Jury-Member-in-Charge must control the time.

EDITION 2017 | Second Print 01/2018
Copyright: ISSF

6.18.1.7 Malfunctions.

Malfunctions in the Qualification will be governed according to 6.13. Malfunctions in the Final will be governed according to 6.17.1.6. Athletes may have only one malfunction per stage (Qualification and Final), either ALLOWABLE or NON-ALLOWABLE.

6.18.1.8 EST Complaints and Score Protests.

EST complaints during the Qualification will be decided according to 6.16.5.2. EST complaints during Finals will be decided according to 6.18.3.5.

6.18.1.9 Protests.

Protests during the Qualification will be decided according to 6.16. Any protests made during Finals will be decided by a Finals Protest Jury according to 6.17.1.10 d) and 6.17.6.

6.18.1.10 Victory Ceremonies.

Victory Ceremonies for Mixed Team events will be conducted according to 6.17.7.

6.18.2 QUALIFICATION

6.18.2.1 Location.

Mixed Team Qualifications will be fired on the Qualification Range in one or more relays.

6.18.2.2 Squadding.

The two members of each team must be squadded to fire on adjacent firing points with the male athlete on the right and the female athlete on the left. Teams will be squadded by a random computer draw according to 6.6.6. Teams from the same nation may not be squadded next to each other.

6.18.2.3 Call to Line.

For each Qualification relay, the CRO will call the athletes to the line five (5) minutes before the Preparation and Sighting Time starts.

6.18.2.4 Preparation and Sighting Time.

There will be a ten (10) minute Preparation and Sighting Time before the Qualification. This will be followed by a 30-second pause to reset the targets. During the Preparation and Sighting Time, an Announcer may explain the competition format for spectators and may also introduce the competing teams.

Copyright: ISSF

6.18.2.5 Number of Match Shots and Time Limit.

In the Qualification Stage, each team member will fire forty (40) Match shots (80 total shots per team), with a time limit of 50 minutes. The Qualification competition will be conducted according to 6.11.

6.18.2.6 Scoring.

Decimal ring scoring (6.3.3.1) will be used for the 10m Rifle Mixed Team Qualification. Whole ring scoring will be used for the 10m Pistol Mixed Team Qualification.

6.18.2.7 Team Ranking.

Teams will be ranked according to their team scores. Ties will be broken by applying 6.15.1 to the team scores (totals of the two team member scores).

6.18.2.8 Qualification for Final.

The top five (5) teams in the Qualification advance to the Final.

6.18.3 FINAL

6.18.3.1 Location.

10m Rifle and Pistol Mixed Team Finals must, if possible, be fired on a Finals Range. Results monitors visible to both members of each team must be available on the FOP.

6.18.3.2 Finals Officials.

The conduct and supervision of Mixed Team Finals will be done according to 6.17.1.10.

6.18.3.3 Squadding.

The five teams in the Final will be squadded by a random draw on the ten (10) firing points of the Finals Range. Team members must be squadded to fire on adjacent firing points. When the team reports (30 min. before), the team coach must inform the RTS Jury which team member will shoot on the left and which team member will shoot on the right.

6.18.3.4 Scoring.

Scores in the Qualification do not carry forward. Finals scoring starts from zero. All Match shots in the Finals (both Rifle and Pistol) will be scored with decimal scoring.

EDITION 2017 | Second Print 01/2018
Copyright: ISSF

6.18.3.5 EST Complaints During Finals.

If a team member or coach complains, or a Range Officer or Jury Member observes, that the paper strip is failing to advance, the CRO must stop the Sighting Period or competition, direct the Technical Officer to fix the problem and then continue firing.

If a team member complains that his target fails to register or that there is an unexpected zero or unexplained miss, the following steps must be taken:

a) The Jury and Range Officer must note the time when the complaint occurred;

b) The Range Officer must stop the second team member from firing and direct the athlete whose target malfunctioned to fire another shot. If the additional shot registers, the Range Officer will direct the team to complete the series/shot plus 60 seconds of additional time. The value of the additional shot will be counted and the missing shot will be ignored.

c) If the additional shot does not register, the Range Officer must direct the team with the target that malfunctioned to stop shooting. At the end of the series/shot, the Jury must stop the competition and direct the Technical Officer(s) to repair or replace the target.

d) After the target is repaired or replaced, all teams will be given two (2) minutes of unlimited sighting shots. The team that had the malfunctioning target will then complete their series/shot in the time remaining when the interruption occurred plus 60 seconds of additional time. After they complete their series, the competition will continue.

6.18.3.6 Reporting and Start Times.

The Start Time for the Final is when the CRO begins the commands for the first competition series. Teams that qualify for the Final must report to the Finals Range Preparation Area, with both team members, one coach and all necessary equipment, at least 30 minutes before the Start Time. A two-point (2) penalty will be deducted from the score of the first competition series if one or two team members do not report on time. If the Victory Ceremony is scheduled after the Final, all athletes must report with a national team uniform appropriate for a Victory Ceremony. Juries must complete equipment checks during the reporting period and as soon as possible after the athlete reports. Team members and their coaches must be allowed to place their rifles or pistols on their assigned firing points in the FOP at least 18 minutes before the Start Time. Teams and their coaches must be assembled in firing point order for the Call to the Line at least twelve (12) minutes before the Start Time.

Copyright: ISSF

6.18.3.7 Call to Line.

The CRO will call all athletes in the Final to the firing line by commanding **"ATHLETES TO THE LINE."** All athletes must pause on the firing line and turn to face the spectators as the CRO announces **"LADIES AND GENTLEMEN, PLEASE WELCOME THE ATHLETES IN THE (10 METER AIR RIFLE/AIR PISTOL) MIXED TEAM FINAL."** After pausing for applause, the CRO will command **"TAKE YOUR POSITIONS."** The athletes must then turn and go directly to their assigned firing points.

6.18.3.8 Preparation and Sighting Time.

After one (1) min., the CRO will command **"FIVE (5) MINUTES PREPARATION AND SIGHTING…START."** After four min. and 30 sec., the CRO will announce: **"30 SECONDS."** After five min., the CRO will command **"STOP…UNLOAD."**

6.18.3.9 Presentation of Teams in Final.

After the command **"STOP...UNLOAD,"** Finalists must open gun actions and insert safety flags. Rifle finalists may remain in position during the presentation, but must lower their rifles from their shoulders, keep them down throughout the presentation and turn towards spectators. Pistol finalists must lay their pistols down and turn to face spectators for the presentation. A Range Officer must verify that gun actions are open with safety flags inserted. After finalists' guns are checked, the Announcer will introduce the finalists, CRO and Jury Member-in-Charge according to 6.17.1.12. Immediately after the presentation, the CRO will command **"TAKE YOUR POSITIONS."**

6.18.3.10 5-Shot Competition Series.

The Final will begin with each team member shooting three (3) 5-shot series (10 total shots per team per series, 30 total shots per team). During each series the two team members must alternate firing shots (see 6.18.3.3 above) with the athlete on the left shooting first and the athlete on the right second (L-R-L-R-L-R etc.). Both athletes may load and prepare their firing positions after the command **"LOAD,"** but the athlete on the right may not shoot until the athlete on the left has fired. Teams will have 300 seconds to fire 2 x 5 shots. A two (2) point penalty will be deducted from the score of a team that shoots out of order.

EDITION 2017 | Second Print 01/2018
Copyright: ISSF

6.18.3.11 5-Shot Series Procedure.

60 sec. after commanding **"TAKE YOUR POSITIONS,"** the CRO will command **"FOR THE FIRST COMPETITION SERIES…LOAD."** After 5 sec., the CRO will command **"START."**

a) After 300 seconds or after all finalists have fired five (5) shots, the CRO will command **"STOP."**

b) Immediately after the command **"STOP,"** the Announcer will give 15-20 sec. of comments on the current ranking of the teams and notable scores. Individual shot scores are not announced.

c) Immediately after the Announcer finishes, the CRO will command **"FOR THE NEXT COMPETITION SERIES, LOAD."** This sequence will continue until all team members have fired three (3) 5-shot series.

6.18.3.12 Single Competition Shots.

After each team has fired 3 x 10 shots (30 shots per team), single competition shots with each team member firing one (1) shot will begin. For each shot, the athlete on the left must shoot first and the athlete on the right second. Teams will have 60 seconds to fire their two single shots. A two (2) point penalty will be deducted from the score of a team that shoots out of order. After each team member has fired two (2) single shots, the first elimination will occur. The place finish of each team will be decided as follows:

a) After each team member has fired 17 shots (15 + 2), the fifth place team will be eliminated.

b) After each team member has fired 19 shots (15 + 2 + 2), the fourth place team will be eliminated.

c) After each team member has fired 21 shots (15 + 2 + 2 + 2), the third place team will be eliminated and the bronze medal winner decided.

d) After each team member has fired 24 shots (15 + 2 + 2 + 2 + 3), the gold and silver medal winners will be decided.

Copyright: ISSF

6.18.3.13 Single Shot Procedure.

Immediately after the Announcer finishes commenting on the rankings and scores after three 5-shot series, the CRO will command **"FOR THE NEXT COMPETITION SHOT…LOAD."** After 5 sec., the CRO will command **"START."**

a) After 60 seconds or after all finalists have fired one (1) shot, the CRO will command **"STOP."**

b) Immediately after the command **"STOP,"** the Announcer will give 15-20 sec. of comments on the current rankings of the teams and notable scores. Individual shot scores are not announced.

c) Immediately after the Announcer finishes, the CRO will command **"FOR THE NEXT COMPETITION SHOT, LOAD"** and this single shot sequence will continue. After all team members have fired two (2) single shots (2 x 17 total shots), the 5th place team is eliminated.

d) After all remaining team members have fired two (2) additional single shots (2 x 19 total shots), the 4th place team is eliminated.

e) After all remaining team members have fired two (2) additional single shots (2 x 21 total shots), the 3rd place team is eliminated.

f) After all remaining team members have fired three (3) additional single shots (2 x 24 total shots), the 1st and 2nd place teams (gold and silver medal winners) are decided.

6.18.3.14 Tie-Breaking.

Ties for a team to be eliminated or to determine gold or silver medal winners will be broken by shoot-offs. Tied teams (both members) must fire additional tie-breaking shots, with the athlete on the left shooting first and the athlete on the right shooting second, until the tie is broken. The CRO will announce **"THERE IS A TIE BETWEEN THE TEAMS FROM (NATION) AND (NATION)"** and then conduct the shoot-off. The time limit for each tie-breaking shot is 60 seconds. Ties will be decided by the team totals for the tie-breaking shots.

6.18.3.15 Final Completion.

If after the 24th shot there are no ties and the gold and silver medal winners are decided, the CRO will command **"STOP...UNLOAD"** and declare "**RESULTS ARE FINAL."** A Range Officer must verify that gun actions are open with safety flags inserted. The Jury must assemble the three medal winning teams on the FOP and the Announcer will recognize the bronze, silver and gold medal winning teams.

EDITION 2017 | Second Print 01/2018
Copyright: ISSF

6.19 FORMS

Forms to be used in conducting ISSF Championships are provided on the following pages as follows:

a) **PROTEST FORM (Form P)**

b) **APPEAL FORM (Form AP)**

c) **Range Incident Report Form (Form IR)**

d) **Scoring and Results Office Score Notification Form (Form CN)**

e) **25m Rapid Fire Pistol Men Malfunction Score Computation (Form RFPM)**

f) **25m Standard Pistol Men Malfunction Score Computation (Form STDP)**

g) **Dress/Advertising Code Violation Warning (Form DC)**

Copyright: ISSF

PROTEST FORM – PAGE 1

ISSF	PROTEST FORM	P

Protest Information (To Be Completed By Athlete or Team Official)

Event:

Protest to Jury:

Date and time of action or decision being protested.

Action or Decision Being Protested (describe in writing):

Reason for Protest (also list ISSF Rules concerned):

Protest Submitted By:

Name and Signature

Protest RECEIPT (To Be Completed By Official Receiving Protest)

Protest received: Date: Time:

Amount Fee Paid: Received by:

Printed Name and Signature of official receiving protest:

PROTEST FORM 2017/V1.1-1

EDITION 2017 | Second Print 01/2018
Copyright: ISSF

PROTEST FORM – PAGE 2

JURY DECISION (TO BE COMPLETED BY JURY CHAIRMAN)
The Jury met on at to consider the protest.
Date: Time:
The protest was upheld o / denied o
Reason for Jury Decision:
Jury Chairman: Name and Signature
Notification to the Protester:
Date:
Time:
Fee retained / returned:

PROTEST FORM 2017/V1.1-1

Copyright: ISSF

APPEAL FORM – PAGE 1

ISSF	**APPEAL OF A JURY DECISION TO THE JURY OF APPEAL**	**AP**

To Be Completed By Team Leader Or Representative

If there is continued disagreement with a Jury decision, the matter may be appealed to the Jury of Appeal. A copy of the previous Protest Form (P) must be attached.

Reason for Appeal:

Appeal Submitted By:

Name – Nation – Signature

Appeal information (To Be Completed By Official Receiving Appeal)

Appeal received: Date: Time:

Amount Fee Paid: Received by:

Printed Name and Signature of official receiving protest:

EDITION 2017 | Second Print 01/2018
Copyright: ISSF

APPEAL FORM – PAGE 2

JURY OF APPEAL DECISION (TO BE COMPLETED BY JURY CHAIRMAN)
The Jury of Appeal met on at to consider the protest.
Date: Time:
The protest was upheld o / denied o
Reason for Jury of Appeal Decision:
Jury Chairman: Name and Signature
Notification to the Appellant:
Date:
Time:
Fee retained / returned:
Name and Signature
The decision of the Jury of Appeal is Final.

APPEAL OF A JURY DECISION TO THE JURY OF APPEAL 2017/V1.1-1

Copyright: ISSF

ISSF	RANGE INCIDENT REPORT FORM	IR

Incident Report Serial Number: (A record must be kept in Range Register)	

Date of Incident:		Time of Incident:	

Event:		Relay:		Firing Point:	

Athlete's Name:		Stage:	

Bib Number:		Nationality:		Series:	

Brief Details of Incident:
Applicable ISSF Rules:
Penalty imposed:

Signature of Range Officer Initiating Report:		Printed Name:		Time:	
Signature of Competition Jury Member:		Printed Name:		Time:	
Signature of RTS Officer:		Printed Name:		Time:	
Signature of RTS Jury Member:		Printed Name:		Time:	
Signature of Ranking Technical Officer:		Printed Name:		Time:	

Score Amendment Reference:		Ref:	

NOTE: When completed by the Range Officer and Jury, a copy of this form must be sent to the Range (EST) Control Room immediately.

EDITION 2017 | Second Print 01/2018
Copyright: ISSF

ISSF	RTS OFFICE SCORE NOTIFICATION FORM	CN

EVENT:		DATE:	
RELAY:		ELIMINATION / QUALIFICATION:	

PRELIMINARY RESULT POSTED BY (NAME):		TIME:	
PROTEST TIME ENDED AT:		TIME:	
THERE WERE NO PRO-TESTS (NAME):		RESULTS CONFIRMED:	
OR...			
PROTEST SUBMITTED (SEE ATTACHED PROTEST FORM)		TIME PROTEST RECEIVED:	
RESULTS NOT YET CONFIRMED			
SIGNATURE OF RTS OFFICER:		TIME:	
SIGNATURE OF RTS JURY MEMBER:		TIME:	
SIGNATURE OF RANKING TECHNI-CAL OFFICER:		REF:	

NOTE: When completed by the RTS Officer, a copy of this form must be sent to the Range (EST) Control Room immediately.

RTS OFFICE SCORE NOTIFICATION FORM 2017/V1.1-1

Copyright: ISSF

ISSF	25m Rapid Fire Pistol Men Malfunction Score Computation	Form RFPM

Stage & Relay	/	Series and Time Stage	1st / 2nd 8s / 6s / 4s	Time of Malfunction	
Firing Point Number		Athlete's Name			
Bib Number		Nationa-lity		Date	

For ALLOWABLE malfunction insert "AM," for NON-ALLOWABLE insert "NAM 0," for UNFIRED SHOTS insert "0" – only for misses, or for shots not fired on each single target in both series:

Shot: / Series:	Left Monitor	Monitor	Middle Monitor	Monitor	Right Monitor	Total
Competition						
Malfunction Repetition						
Final Score						

(Final Score equals the total of the lowest value score in each column.)

If second part of a ten shot series, the total of the previous (first) five shots must be recorded; if not, leave blank.	Previous five shot score:		Correct ten shot score:

Range Officer's Signature		Range Officer's Name (Printed)	
Range Jury Member's Signature		Range Jury Member's Name (Printed)	
RTS Officer's Signature		RTS Jury Member's Signature	
Confirmation of Manual Interven-tion of Computer Result at Ran-king Computer		Technical Officer's Signature	
RTS Jury Member's Signature		Correction Reference Number	

NOTE: When completed by the Range Officer and Jury, a copy of this form must be sent to the Range (EST) Control Room immediately.

EDITION 2017 | Second Print 01/2018
Copyright: ISSF

ISSF	25m Standard Pistol Men Malfunction Score Computation	Form STDP

Relay	Series and	1st / 2nd / 3rd / 4th	Time of Malfunction	
	Time Stage	150 / 20 / 10 sec		

Firing Point Number		Athlete's Name			
Bib Number		Nationality		Date	

For ALLOWABLE malfunction insert "AM," for NON-ALLOWABLE insert "NAM 0," for UNFIRED SHOTS insert "0" – only for misses, or for shots not fired (by shot number) on the target in both series:

Shot: / Series:	1	2	3	4	5	Total
Competition						
Malfunction Repetition						
Final Score						

(Final Score is the total of the five lowest value shot-scores overall.)

If second part of a ten shot series, the total of the previous (first) five shots must be recorded; if not, leave blank.	**Previous five shot score:**		**Correct ten shot score:**	

Range Officer's Signature		Range Officer's Name (Printed)	
Range Jury Member's Signature		Range Jury Member's Name (Printed)	
RTS Officer's Signature		RTS Jury Member's Signature	
Confirmation of Manual Intervention of Computer Result at Ranking Computer		Technical Officer's Signature	
RTS Jury Member's Signature		Correction Reference Number	

NOTE: When completed by the Range Officer and Jury, a copy of this form must be sent to the Range (EST) Control Room immediately.

EDITION 2017 | Second Print 01/2018
Copyright: ISSF

6.20 THE ISSF DRESS CODE

ISSF Rule General Technical Rule 6.7.5 states:

"It is the responsibility of athletes, coaches and officials to appear on the range dressed in a manner appropriate for a public sports event. Clothing worn by athletes and officials must comply with the ISSF Dress Code."

This Rule is the foundation of the ***ISSF Dress Code***.

6.20.1 GENERAL

All sports are concerned with the images they present to youth, the public and media. Olympic sports, in particular, are judged by whether their athletes, coaches and officials present professional images that demonstrate their best qualities. Shooting's ability to grow as a sport, to attract new participants and fans and to secure its status as an Olympic sport are affected by how its athletes and officials dress. This ***ISSF Dress Code*** provides regulations and guidelines for the implementation of Rule 6.7.5.

6.20.2 DRESS REGULATIONS FOR ATHLETES

6.20.2.1 All clothing worn by athletes in Training, Eliminations, Qualifications and Finals must be clothing that is appropriate for wear by athletes in international-class sports competitions. Athletes' clothing must convey positive images of shooting athletes as Olympic sport athletes.

6.20.2.2 When they appear in competitions, Rifle, Pistol, Shotgun and Running Target athletes should wear sports-type clothing that incorporates or displays national, NOC or National Federation colors and emblems. Appropriate clothing for wear during competitions includes training suits, tracksuits or warm-up uniforms, etc. as issued by National Federations or NOCs.

6.20.2.3 Members of a team participating in a Team event should wear the same uniform reflecting the nation they represent.

6.20.2.4 During Victory Ceremonies or other ceremonies, athletes are required to be dressed in their official national uniform or national training suits. For teams, all members of the team must wear appropriate national uniforms. If an athlete reports for a Victory Ceremony without a national team uniform, a Jury member may delay the ceremony and require the athlete to change into appropriate clothing before the ceremony can proceed.

6.20.2.5 Rifle athletes' clothing must comply with Rifle Clothing Regulations described in Rule 7.5. If they do not wear special shooting trousers or shoes, the clothing worn during competitions must comply with this ISSF Dress Code.

EDITION 2017 | Second Print 01/2018
Copyright: ISSF

6.20.2.6 During all Pistol training and competition, women are required to wear dresses, skirts, divided skirts, shorts or trousers, and blouses or tops (must cover the front and back of the body and be over each shoulder). Men are required to wear full-length trousers or shorts and long or short sleeved shirts. Athletes are not permitted to wear any form of performance enhancing clothing. All athlete clothing must comply with the ISSF Dress Code (Rule 6.7.5 and 6.20).

6.20.2.7 Shotgun athletes must comply with Shotgun Clothing Regulations described in Rule 9.13.1.

6.20.2.8 If shorts are worn during competitions, the bottom of the leg must be not more than 15 cm above the center of the knee cap. Skirts and dresses must also comply with this measurement.

6.20.3 PROHIBITED ITEMS

6.20.3.1 Prohibited clothing items for competitions and Victory Ceremonies include blue jeans, jeans or similar trousers in non-sporting colors, camouflage clothing, sleeveless T-shirts, shorts that are too short (see 6.19.2.8), ragged cut-off shorts, trousers with patches or holes as well as shirts or trousers with non-sporting or inappropriate messages (see Rule 6.12.1, no propaganda is permitted). Sporting colors should be national uniform colors. If national colors are not worn, non-sporting colors that should be avoided are camouflage, plaids, khaki, olive or brown.

6.20.3.2 Athletes may not wear sandals of any type or remove their shoes (with or without socks).

6.20.3.3 Changing clothes must be done in designated areas and not on the field of play. Changing on the firing points or in the ranges is not permitted.

6.20.3.4 All clothing must comply with ISSF Eligibility, Commercial Rights, Sponsorship and Advertising Rules regarding the display of manufacturer and sponsor marks. During the Olympic Games compliance with IOC Rule 50 is required.

6.20.4 DRESS REGULATIONS FOR COACHES AND OFFICIALS

6.20.4.1 The ISSF Dress Code applies to ISSF Jury Members and National Technical Officials including Range Officers and Shotgun Referees. The ISSF Dress Code also applies to coaches when they are working on the field of play during training, competitions or Finals.

6.20.4.2 Unless the organizer provides special official clothing, Jury members should wear dark trousers, or skirts, with light coloured shirts with collars and long or short sleeves. If, due to the climate, a warm sweater or jacket is necessary it should preferably be of a dark color. In warm climates, light weight trousers are recommended. Dark normal shoes or sporting shoes are recommended.

6.20.4.3 While on duty, Jury Members must wear the red Jury vests that are available from ISSF Headquarters.

Copyright: ISSF

6.20.4.4 While on duty, Shotgun Referees must wear the blue Referee vests that are available from ISSF Headquarters.

6.20.4.5 Competition officials and coaches may not wear any prohibited clothing items that are described in paragraph 6.20.3 above.

6.20.5 DRESS REGULATIONS FOR PHOTOGRAPHERS AND TV CAMERAMEN

6.20.5.1 Accredited photographers and TV cameramen with access to the FOP must respect the ISSF Dress Code because they are working in the public view.

6.20.5.2 Photographers and TV cameramen should not wear sleeveless shirts, cut-offs, gym or running shorts. If they wear shorts, they must wear socks and shoes.

6.20.5.3 Photographers working on the FOP must wear the official POOL or NON-POOL PHOTOGRAPHER bib/vest that is issued by the ISSF. Photographer vests will bear the ISSF logo and may bear one sponsor logo not bigger than the ISSF logo. Photographer vests are numbered so photo coordinators or the ISSF Technical Delegate can identify photographers.

6.20.5.4 TV cameramen working on the field of play must wear the official TV CAMERAMAN bib/vest. These vests must bear the ISSF logo and have easily distinguishable numbers on the front and back of the bib vest so that TV cameramen can be identified.

6.20.5.5 Photographers and TV cameramen are not allowed to wear any other vest or jacket displaying advertising while working on the field of play.

6.20.6 DRESS CODE ENFORCEMENT PROCEDURES

6.20.6.1 ISSF Equipment Control, Rifle, Pistol and Shotgun Juries are responsible for enforcing ISSF Clothing Regulations and the ISSF Dress Code.

6.20.6.2 During ISSF Championships, ISSF Juries will issue written warnings with requests to correct clothing violations for first violations. Athletes who receive written warnings and do not correct clothing violations (change clothing) will be disqualified. Juries will normally give warnings during equipment inspection or training. Juries may allow an athlete to complete Pre-Event Training (Shotgun or 25m Pistol) before changing if sufficient time to change is not available. No athlete will be permitted to participate in a Qualification or Final competition or in a Victory Ceremony while wearing inappropriate or prohibited clothing.

6.20.6.3 Before and during the competitions, Juries must use the ISSF Dress/Advertising Code Violation Warning Form (Form DC) to inform Dress or Advertising Code violators and to request corrective action.

EDITION 2017 | Second Print 01/2018
Copyright: ISSF

ISSF	DRESS/ADVERTISING CODE VIOLATION WARNING	DC

Incident Report Number: (A record must be kept in Range Register)			
Date of Violation:		Time of Violation:	
Athlete's Name:			
Bib Number:		Nation:	

Description of Dress/Advertising Code Violation:
Corrective Action Requested:

Signature of Jury Member:	Printed Name:	Time:

IMPORTANT: Athletes who receive a Dress/Advertising Code Violation Warning may be disqualified from a competition if the violation is not corrected.

DRESS/ADVERTISING CODE VIOLATION WARNING 2017/V1.1-1

Copyright: ISSF

6.21 INDEX

10m Air Pistol –Target	6.3.4.6
10m Air Rifle –Target	6.3.4.3
10m Air Rifle + Pistol Mixed Team Events	6.18
10m Events – Specific Rules for 10m Air Gun Events	6.11.2
10m Indoor Air Gun Ranges	6.4.3.3 c
10m Ranges – Firing Point Standards	6.4.10
10m Ranges – Light Measurements	6.4.14
10m Running Target – Electronic Scoring Targets	6.4.16.2
10m Running Target –Target	6.3.4.8
25m and 50m Indoor Ranges	6.4.3.3 d
25m and 50m Precision Pistol –Target	6.3.4.5
25m EST – Control Sheets	6.3.5.4
25m Events – Targets - RFP	6.3.4.4
25m Events – Targets - Precision	6.3.4.5
25m Exposure Times	6.4.12
25m Outdoor Ranges – Open to the Sky	6.4.3.3 g
25m Ranges – Dimension of Firing Points	6.4.11.7
25m Ranges – Equipment of Firing Points	6.4.11.10
25m Ranges – Screens between the Firing Points	6.4.11.8
25m Ranges – Sections (Groups)	6.4.11.3
25m Ranges – Firing Point Standards	6.4.11
25m Rapid Fire Pistol Event – Allocation of Firing Points	6.6.6.2
25m Rapid Fire Pistol Event – Groups of Targets	6.4.11.3
25m Rapid Fire Pistol Event –Target	6.3.4.4
25m Targets – Exposure Times	6.4.12
25m Targets – Letters on the Targets	6.4.3.6
25m Timing of Electronic Scoring Targets	6.4.13
300m Electronic Scoring Targets – Crossfires	6.11.6.9 c
300m Outdoor Ranges – Open to the Sky	6.4.3.3 e
300m Ranges - Firing Point Standards	6.4.8
300m Rifle –Target	6.3.4.1
50m Outdoor Ranges – Open to the Sky	6.4.3.3 f
50m Ranges - Firing Point Standards	6.4.9
50m Rifle –Target	6.3.4.2
50m Running Target –Target	6.3.4.7

EDITION 2017 | Second Print 01/2018
Copyright: ISSF

Abbreviations used in Results Lists	6.14.4.2
Additional Sighting Shots – Malfunction	6.13.4
Aiming Exercises - 10m and 50m	6.11.1.1 f
Allocation of Firing Points – 10m Events	6.6.6 f / 6.6.6 g
Allocation of Firing Points – 25m Rapid Fire Pistol	6.6.6.2
Allocation of Firing Points – Basic Principles	6.6.6
Allocation of Firing Points – Eliminations Events on Outdoor Ranges	6.6.6.1
Allocation of Firing Points – Equal Conditions	6.6.6 c
Allocation of Firing Points – Range Constraints	6.6.6 b
Allocation of Firing Points – Running Target (Rule 10.7.3.1)	6.6.6.5
Allocation of Firing Points – Shotgun (Rule 9.11.4)	6.6.6.4
Allocation of Firing Points – Supervised by the Technical Delegate	6.6.6 a
Allocation of Firing Points – Teams – More than one Relay	6.6.6 g
Allowable Malfunctions	6.13.2.1
Alteration of a Gun or Equipment	6.7.9.4
Annulment of a Shot	6.11.6.9
Annulment of a Shot – The Athlete did not fire: Confirmed	6.11.6.9 a / 6.11.6.7
Annulment of a Shot – The Shot is reported by another Athlete	6.11.6.9 b
Appeals	6.16.6
Appeals – Post Competition Test DSQ	6.7.9.3
Application of ISSF Rules	6.1.2
Appropriate Dress for a Public Event – Clothing Regulations	6.7.5 / 6.20
Backing Cards and Control Sheets 50m / 300m	6.3.5.5
Backing Targets – 25m	6.3.5.3
Backing Targets – 50m/300m	6.3.5.2
Bib (Start) Numbers	6.7.7
Blinders	6.7.8
Camouflage Clothing	6.20.3.1
Cases for Guns	6.2.2.8
Ceremonies – Appearance of the Athletes	6.20.2.4
Championship Administration	6.6
Championship Program and Schedule	6.6.1
Changing from Sighting to MATCH Shots	6.10.4
Changing of Wind Flags before the Preparation Time	6.4.4.6
Changing or Refilling – Gas or Air Cylinder	6.11.2.3
Chief Range Officer – Duties and Functions	6.9.1
Chief RTS Officer – Duties and Functions	6.9.3
Clay Target Testing	6.3.6.3

Copyright: ISSF

Clay Targets	6.3.6
Clocks on the Ranges	6.4.3.5
Clothing and Equipment	6.7
Clothing Regulations – Appropriate Dress	6.7.5 / 6.20
Coaching during any Event	6.12.5
Commands LOAD / START - UNLOAD / STOP	6.2.3.1
Common Range Standards	6.4.3
Communication Services on the Range	6.4.2 q
Competition Officials	6.9
Competition Rules 10m/50m Rifle & Pistol Events	6.11.1
Complaint concerning Failure to register or display a Shot (EST)	6.10.8 / 6.10.9.3
Complaint during Sighting Shots	6.10.5
Complaint during Sighting Shots - Finals	6.17.1.8 a
Concealed Violation	6.12.6.1 b
Conduct of ISSF Championships	6.1.5
Control Sheets – 25m EST	6.3.5.4
Crossfires	6.11.6
Crossfires – 300m Electronic Scoring Targets	6.11.6.9 c
Crossfires – Annulment of a Shot	6.11.6.7 / 6.11.6.9
Crossfires – Determination of a confirmed Crossfire	6.11.6.4
Crossfires – Determination of a not-confirmed Crossfire	6.11.6.5
Crossfires – Disclaim a Crossfire	6.11.6.6
Crossfires – Not confirmed by the Range Officer	6.11.6.8
Crossfires – Scoring	6.11.6.1
Crossfires – Sighting Shot on a MATCH Target of another Athlete	6.11.6.3
Crossfires – Sighting Shot on a Sighting Target of another Athlete	6.11.6.2
Crossfires – The Athlete did not fire: confirmed by the Range Officer	6.11.6.7
Cylinder Validity Date	6.2.4.2 / 6.7.6.2 g
Decimal Scoring	6.3.3.1 / 6.3.3.2 / 6.3.3.3
Decisions – Jury	6.8.8 / 6.8.9
Decisions – Jury – Cases not covered by the ISSF Rules	6.8.13
Decisions of the RTS Jury	6.10.3.1 / 6.16.5
Deduction	6.12.6.2 b
Deduction from the Score	6.14.7
Deduction of Points – False Information	6.12.6.1 c
Deduction of Points – Release of Propellant prior to Preparation Time	6.11.2.1
Deduction of Points – Shot(s) before the Command START	6.11.1.1 i

EDITION 2017 | Second Print 01/2018
Copyright: ISSF

Deductions – Too many Shots in Event or Position	6.11.5
Definitions and Abbreviations	P211/2
Delaying Start of Final	6.8.12
Deviations of Specifications	6.4.1.10
Disqualification	6.12.6.2 c
Disqualification – Physical Abuse of Official or Athlete	6.12.6.4
Disqualification –Serious Safety Violations	6.12.6.3
Disqualification in a Final	6.12.6.2 c / 6.17.1.13 h
Disturbances	6.11.7
Disturbing other Athletes	6.12.4
Double Trap Ranges – Separate Double Trap Ranges	6.4.19.4
Double Trap Ranges – Standards	6.4.19
Double Trap Ranges – Using a Trap Range	6.4.1.4
Drawing of Lots – Allocation of Firing Points	6.6.6
Dress Code	6.7.5 / 6.20
Dress Code – Prohibited Items	6.20.3
Dry Firing	6.2.4.1 / 6.11.1.1 f
Dry Firing – Definition	6.2.4.1
Duties and Function of the Jury	6.8
Eco-friendly Clay Targets	6.3.6
Electronic Devices	6.7.4.4 / 6.11.8 f
Electronic Scoring Targets – Checked by the Technical Delegate	6.3.2.8
Electronic Scoring Targets – Responsibility of the Athlete	6.10.4
Electronic Scoring Targets (EST)	6.3.2
Electronic Scoring Targets changing to MATCH by Range Officials	6.10.4 b
Eligibility of Athletes (Rule 4.1)	6.7.7.3
Elimination Events	6.6.6.1
Entries – Final Entries	6.6.4
Entry Status and Limits	6.6.1.3
Equipment and Competition Clothing	6.7
Equipment Control – Examination before using the Equipment	6.7.6.1
Equipment Control – Information for Athletes and Team Officials	6.7.6.2 a
Equipment Control – Instruments – Shoe Sole Flexibility Device	6.5.3
Equipment Control – Instruments – Stiffness Measurement Device	6.5.2
Equipment Control – Instruments – Thickness Measurement Device	6.5.1
Equipment Control – Instruments, Gauges	6.5
Equipment Control – Marking of Equipment and Guns	6.7.6.2 e
Equipment Control Procedure	6.7.6.2

Copyright: ISSF

Equipment Control – Register of Equipment	6.7.6.2 f
Equipment Control – Reinspection Fee	6.7.6.2 i
Equipment Control – Responsibility of the Athlete	6.7.2
Equipment Control – Supervision by the Jury	6.8.c
Equipment Control – Unfair Advantage over others	6.7.1
Equipment Control – Validity “one Time only” EC	6.7.6.2 e
Equipment Control in Interest of Safety	6.2.1.6
EST Score Protest	6.16.5.2
EST Technical Officers	6.10.1
Events Table	
Examination by the jury – Extra Shot when shot fails to register	6.10.9.3
Examination of Electronic Scoring Targets by Technical Delegate	6.3.2.8
Examination of Equipment, Guns, Positions during Competition	6.8.5
Extra Shot – Annulling of the last Shot fired (extra to the Competition)	6.10.9.3 d
Extra Shot – Directed to fire an aimed Shot	6.10.9.3
Extra Shot – Not registered and displayed on the Monitor	6.10.9.4
Extra Shot – Registered and displayed on the Monitor	6.10.9.3
Eye Protection	6.2.6
Failure of a single Target	6.10.9.2
Failure of all Targets on a Range	6.10.9.1
Failure of Electronic Scoring Target Systems 10m and 50m	6.10.9
Failure of the Paper or Rubber Band	6.10.6
False Information	6.12.6.1 c
Fees – Protest and Appeals	6.16.4
Finals – 25m RFP – Fires before green light	6.17.1.13 j
Finals – 25m Pistol Women – Fires before green light	6.17.1.13 j
Finals – Announcement of Official Results	6.17.1.14
Finals – Announcement of Scores – 10m Events	6.17.2 g / 6.17.2 h
Finals – Announcement of Scores – 25m Pistol	6.17.5 g
Finals – Announcement of Scores – 25m Rapid Fire Pistol	6.17.4 g
Finals – Athlete not reporting In Time: 2 Points DEDUCTION	6.17.1.3
Finals – Checking Athletes and Equipment before the Final	6.17.1.3
Finals – Competition 25m Pistol	6.17.5
Finals – Competition 25m Rapid Fire Pistol	6.17.4
Finals – Commands – 10m Rifle and Pistol	6.17.2
Finals – Commands – 50m Rifle 3 Positions M & W	6.17.3
Finals – Competition Procedures	6.17.1.
Finals – Complaint during Sighting Shots	6.17.1.8 a

EDITION 2017 | Second Print 01/2018
Copyright: ISSF

Finals – Delay of a Final	6.8.12
Finals – Decimal Scoring	6.3.3.3
Finals – Coaching	6.17.1.13.n
Finals – Dry Firing prohibited	6.17.1.13 e
Finals – Equipment Tests before a Final	6.17.1.3
Finals – EST Complaint	6.17.1.8
Finals – Events-Program 10m Air Rifle and 10m Air Pistol	6.17.2
Finals – Events-Program 25m Pistol Women	6.17.5
Finals – Events-Program 25m Rapid Fire Pistol Men	6.17.4
Finals – Events-Program 50m Rifle 3 Positions Men and Women	6.17.3
Finals – Events-Program Rifle and Pistol	6.17
Finals – Events-Program Shotgun	9.17
Finals – Extra Shot fired	6.17.1.13 k
Finals – Failure of a single Target – during sighting	6.17.1.8 a
Finals – Failure of a single Target – during Final match	6.17.1.8 b
Finals – Failure of all Finals Targets	6.10.9.1
Finals – Failure of all Finals Targets – 10m and 50m Events	6.10.9
Finals – Failure of all Finals Targets – 25m Events	6.10.9
Finals – Final Official Results	6.17.1.14
Finals – Late Arrival	6.17.1.4
Finals – Malfunctions of a Gun 10m and 50m Final	6.17.1.6
Finals – Malfunctions of a Gun 25m RFP Final (Rule 8.9)	6.17.4 m
Finals – Malfunctions of a Gun 25m Pistol Women Final (Rule 8.9.1)	6.17.5 l
Finals – Number of finalists 10m / 50m Events	6.17.1.1
Finals – Number of finalists 25m Events	6.17.1.1
Finals - Officials	6.17.1.10
Finals – Pistol Support Stand	6.4.11.10
Finals – Preparation Time 10m	6.17.2 d
Finals – Preparation Time 25m Events	6.17.4 e / 6.17.5 e
Finals – Presentation of Finalists	6.17.1.12
Finals – Presentation of Medalists	6.17.1.14
Finals – Production and Music	6.17.1.11
Finals – Protests in Finals – Decisions	6.17.6
Finals – Protests in Finals – Score Protests	6.17.1.7
Finals – Qualification – Full Program	6.17.1.1
Finals – Range Equipment	6.17.1.9
Finals – Reporting to the Preparation Area	6.17.1.3
Finals – Rules and Procedures	6.17.1.13

Copyright: ISSF

Finals – Safety Flag	6.17.1.13 m
Finals – Scoring	6.17.1.5
Finals – Pistol Support Stand	6.4.11.10
Finals – Shots fired before START or after STOP – 10m / 50m	6.17.1.13 h / 6.17.1.13 i
Finals – Sighting Commands 10m Rifle and Pistol	6.17.2 d
Finals – Sighting Commands 25m Pistol Women	6.17.5 e
Finals – Sighting Commands 25m Rapid Fire Pistol Men	6.17.4 e
Finals – Sighting Commands 50m Rifle 3 Positions	6.17.3 d
Finals – Starting Positions	6.17.1.2
Finals – Starting Time	6.17.1.3
Finals – Tied Scores 10m	6.17.2 j
Finals – Tied Scores 25m Pistol Women	6.17.5 i
Finals – Tied Scores 25m Rapid Fire Pistol Men	6.17.4 i
Finals – Tied Scores 50m 3 Positions	6.17.3 l
Firing after the Command UNLOAD / STOP	6.2.3.5
Firing before the Command LOAD / START	6.2.3.5
Firing Line	6.4.3.2
Firing Line – Marking and Measurement	6.4.5.4
Firing Point Allocation	6.6.6
Firing Point Equipment - 25m Pistol Ranges	6.4.11.10
Firing Point – Equipment – General	6.4.7.2
Firing Point – Substances	6.11.8 b
Flash Photography when forbidden	6.11.8 g
Flash Targets	6.3.6.2
Forms	6.19
Formula for the Elimination Round	6.6.6.1 d
Function Firing Range	6.4.11.11
Gas / CO2 Cylinder – Athletes Responsibility – validity date	6.7.6.2 g / 6.2.4.2
Gas or Air Cylinder – Changing or Refilling	6.11.2.3
Gauges and Instruments	6.5
General and Administrative Facilities	6.4.2
General Firing Point Standards	6.4.7
General Target Requirements	6.3.1
General Target Standards	6.3
Gun Handling Rules	6.2.2
Handling of Guns – After STOP	6.2.3.6
Handling of Guns – Removing of Guns from the Firing Line	6.2.2.1
Handling of Guns	6.2.2

EDITION 2017 | Second Print 01/2018
Copyright: ISSF

Hearing Protection	6.2.5
Height of Targets	6.4.6.1
Horizontal Variations for Firing Points	6.4.6.3
Horizontal Variations for Target Centers	6.4.6.2
Individual Ties	6.15.1
Indoor Range – Light Measuring	6.4.14.2 / 6.4.14.3
Indoor Range – Light Requirements (Lux)	6.4.14
Inspection of Ranges by the Technical Delegate	6.4.1.9
Interruptions	6.11.3
Irregular Shots 10m, 50m and 300m	6.11.5
Juries – Advising, Assisting & Supervising	6.8
Juries – Appointment of Juries	6.1.5.1
Juries – Competition Jury – Duties and Functions	6.8
Jury – Decisions	6.8.9
Jury – Decisions re Post-competition test failure	6.7.9.3
Jury – Examination and Check before the Competition	6.8.3
Jury – Majority present on the Range	6.8.8
Jury – Responsibilities	6.8
Jury – Supervising – Examination of Equipment, Guns, Positions	6.8.5 / 6.8.6
Jury – Time Extension by the Jury	6.11.3.2 b
Jury Members – Athletes or Team Officials	6.8.14
Jury Members must wear the Official ISSF Jury Red Vest	6.8.2
Knowledge of the Rules	6.1.2 e
Late Arrival of Athlete	6.11.4
Left-handed / Right-handed	6.1.2 g
Light Measuring on Indoor Ranges	6.4.14.2 / 6.4.14.3
Light Requirements on Indoor Ranges	6.4.14
Line of Targets – Parallel to Firing Line	6.4.3.2
Load - Definition	6.2.3.4
Load – More than one Pellet loaded	6.11.2.4
Loading of Guns	6.2.3.2
Loading of Guns – Using a Magazine – Rifle & 10/50m Pistol Events	6.2.3.3
Main Scoreboard	6.4.2 i
Malfunction – If Allowable, Additional Sighting Shots	6.13.4
Malfunctions	6.13
Malfunctions of Guns / Ammunition	6.13
Maximum Athlete Entry	6.6.1.4
Media Facilities	6.4.2 s

Copyright: ISSF

Men's Events / Women's Events	6.1.2 h
Miss – Not fired Shots	6.11.1.2 f
Mixed Team Events - 10m Rifle + Pistol	6.18
Mobile Telephones	6.11.8 f / 6.7.4.4
Mobile Telephones – Notices Informing Restrictions	6.11.8 h
Monitor – Visibility	6.10.4 d
Move to a Reserve Position	6.10.9.2 a
Moving to another Firing Point	6.10.9.4
Music during Competitions	6.11.8 a
Non Allowable Malfunctions	6.13.2.2
Non Verbal Coaching	6.12.5.1
Not fired Shots	6.11.1.2 f
Notices Displayed	6.11.8 h
Not sign the Printer Record – Electronic Scoring Targets	6.10.4 g
Notification of Failure to register or display a Shot (EST)	6.10.9.3
Numbering of Target Frames and Firing Points	6.4.3.6
Numbering of Targets	6.4.3.6
Objective and Purpose of ISSF Rules	6.1.1
Official Championship Program	6.6.1.1
Official Schedule	6.6.1.2
Official Training	6.6.3.1
Officials, Athletes and Spectator Areas	6.4.1.5
Open Violation	6.12.6.1 a
Organization and Supervision of ISSF Championships	6.1.5
Organizing Committee and Appointments	6.1.5.2
Pellet – Load only one (1)	6.11.2.4 / 6.2.3.3
Penalties for Rule Violations	6.12.6
Penalty Cards	6.12.6.2 a / b / c / e
Physical Abuse of Official or Athlete	6.12.6.4
Post Competition Testing	6.7.9
Pre-Event Training	6.6.3.2
Preliminary Scores	6.14.1
Preparation Time – Handling Guns, Dry Firing, Aiming Exercises	6.11.1.1 f
Preparation Time – Sighting Targets, Pre-Competition Checks	6.11.1.1
Presence of the Jury	6.8.8 / 6.8.15
Procedure for Examination of Electronic Scoring Targets	6.10.8
Propaganda	6.12.1
Protection against Rain, Sun, Wind	6.4.1.5

EDITION 2017 | Second Print 01/2018
Copyright: ISSF

Protest concerning the Shot-Value on Electronic Scoring Targets	6.10.7
Protest Fees	6.16.4
Protest Time	6.16.5.1 / 6.16.3
Protests – Dealt by the Jury	6.8.11
Protests – Scoring Protests – RTS Jury	6.16.5
Protests – Verbal	6.16.2
Protests – Written Protests	6.16.3
Protests and Appeals	6.16
Put down a Gun	6.2.2.4
Questioned Shot – Scoring	6.10.9.3
Questioned Shot not located	6.10.9.3 e
Range Commands	6.2.3
Range Officer(s) – Duties and Functions	6.9.2
Range Officers – Knowledge and Enforcement of the ISSF Rules	6.1.2 e
Range Scoreboards	6.4.2 i
Ranges and Other Facilities	6.4
Ready to shoot – Athlete to report on time	6.12.4 a
Recognised Shooting Events	P213
Records	6.14.9
Release of Propellant Charge after MATCH Firing starts	6.11.2.2
Remaining Time	6.11.1.2 e
Repair or replace a Gun	6.13.3
Replace or repair a Gun – No extra Time, but additional Sighting Shots	6.13.4
Replacement of an Athlete in a Team Event	6.6.5 c
Responsibility of Range Officials LOAD / START - UNLOAD / STOP	6.2.3.1
Responsibility of the Athlete	6.12.4
Responsibility of the Athlete - Equipment	6.7.2
Result Distribution	6.14.3
Result List – Contents	6.14.4.1
Result Lists – Abbreviations	6.14.4.2
Result Lists – Produced by ISSF Headquarters	6.14.4
Resume Shooting after STOP	6.2.3.6
Right-handed / Left-handed	6.1.2 g
RTS Jury – Electronic Scoring Targets	6.10.3
RTS Jury – Supervision of Scoring	6.8 b / 6.10.3.1
RTS Officers – Duties and Functions	6.9.4
Rule Violations – Penalties	6.12.6.2
Rules for all Rifle and 10m and 50m Pistol Events	6.11.1

Copyright: ISSF

Rules of conduct for Athletes and Officials	6.12
Running Target – Allocation of Firing Points	6.6.6.5
Running Target – Athlete visible to the Spectators	6.4.15.4
Running Target – Dry Firing Position	6.4.15.5
Running Target – Run Times	6.4.15.8
Running Target – Width of the Shooting Station	6.4.15.5
Running Target Ranges - Standards	6.4.15
Running Target Ranges 10m	6.4.16.2
Running Target Ranges 50m	6.4.16.1
Safety	6.2
Safety Flags	6.2.2.2
Safety of Athletes, Range Officials, Spectators	6.2.1.3 / 6.2.2.3
Safety of Ranges	6.2.1.2
Safety Rules - General	6.2.1
Serious Safety Violations	6.12.6.3
Scope of Technical Rules	6.1.3
Scoring and Results Procedure	6.14
Scoring Protests	6.10.7 / 6.16.5
Scoring Protests – Electronic Scoring Targets	6.10.7
Scoring Protests – Electronic Scoring Targets: 2 Points DEDUCTION	6.16.5.2 c / 6.10.7 d
Shadow on Targets	6.4.3.1
Shoe Sole Flexibility Measuring Device	6.5.3
Shooting Distances	6.4.5
Shooting Distances - Measurement	6.4.5.1
Shooting Mats	6.4.7.2 b
Shooting Tables	6.4.7.1
Shot Fails to Register	6.10.9.3
Shot(s) after the Command STOP	6.11.1.3
Shot(s) before the Command START	6.11.1.1 i
Shotgun – Allocation of Firing Points (Rule 9.11.4)	6.6.6.4
Shotgun – Selection of Ranges and Rounds	6.6.6.4
Shotgun Venues - Standards	6.4.17
Shots out of the Area of the Control Sheet	6.3.5.5
Side Blinders	6.7.8.1
Side Blinders for Shotgun (Rule 9.13.4)	6.7.8.1
Sighters – Match Changing done by the Target Officer	6.11.1.1 k
Sighting Shots	6.11.1.1
Sighting Shots after the first Competition Shot	6.11.1.2 c

EDITION 2017 | Second Print 01/2018
Copyright: ISSF

Sighting Shots before the first Competition Shot	6.11.1.1
Sign the Printer Record – Electronic Scoring Targets	6.10.4 f / 6.10.4 g
Skeet Ranges – Standards	6.4.20
Skeet Ranges – Standards Range View	6.4.20.4
Smoking	6.11.8 e
Sound Producing Devices	6.7.4.3
Sound Reducing Devices	6.2.5
Special Devices – Clothing	6.7.4.2
Spectators Area	6.4.1.5 / 6.4.3.4
Spirit and Intent of the ISSF Rules	6.8.13
Standards for Running Target Ranges – General	6.4.15
Standards for Shotgun Ranges	6.4.17
Start Lists	6.6.5
Start of Match Firing	6.11.1.2
Stiffness Measuring Device	6.5.2
Stop Command	6.11.1.3
Stop Firing more than 3 Minutes	6.11.3.1
Stop Firing more than 5 Minutes or Moving to another Firing Point	6.11.3.2
Stop Shooting by Jury Member / Range Officer in Interest of Safety	6.2.1.5
Substances – Put on the Firing Point	6.11.8 b
Substitute Gun – Malfunction	6.13.3
Sun – Direction of Ranges	6.4.3.1
Systems of Targets	6.4.1.8
Tape on Firing Point	6.11.8 c
Target Centre Locations	6.4.6
Target Control Systems	6.3.5
Targeted Testing	6.7.9.4
Target Line	6.4.5.4
Target Officer – Electronic Scoring Targets	6.10.2
Targets and Target Standards	6.3
Team Leader – Responsibilities	6.12.3
Team Scores in 50m and 300m Eliminations Events	6.6.6.1 e / 6.6.6.1 f
Team Ties	6.15.5
Technical Delegate: Check of Electronic Scoring Targets	6.3.2.8
Technical Delegate: Report of World Records	6.14.9.5
Technical Delegate: Shotgun Events – Selection of Ranges / Rounds	6.6.6.4
Technical Delegate: Supervision – Allocation of Firing Points	6.6.6 a
Technical Meeting	6.6.2

Copyright: ISSF

Technical Officers – Electronic Scoring Targets	6.10.1
Thickness Measuring Device	6.5.1
Testing of Guns (Function Test)	6.4.11.11
Threat to the Safety of others on a Shooting Range	6.2.1.4
Tie-Breaking – Count back	6.15.1 b
Tie-Breaking – General	6.15
Tie-Breaking – Individuals	6.15.1
Tie-Breaking – Team Events	6.15.5
Ties in Olympic Events with Finals	6.15.4
Time Extension by the Jury – Marking on the Incident Report	6.11.3.2 b
Time Extension by the Jury – Moving to another Firing Point	6.11.3.2
Time Extension by the Jury – Stop Firing more than 5 Minutes	6.11.3.2
Timing Running Target	6.4.15.8
Too many Shots in an Event or Position	6.11.5
Training – General	6.6.3
Transfer the Values of excessive Shots – Count back Situation	6.11.5
Trap and Double Trap Pit Section	6.4.18.5
Trap Ranges – Standards	6.4.18
Trap Ranges – Target Throwing Machines	6.4.18.3
Unfair Advantage over others	6.7.1 / 6.1.4
Unofficial Training	6.6.3.3
Unsportsmanlike Behaviour	6.12.6.2 d
Verbal Protests	6.16.2
Verifying the Safety of Guns	6.2.2.4
Victory Ceremonies	6.17.7
Violation of Safety Rules in a Dangerous Manner	6.12.6.3
Violations – Concealed	6.12.6.1 b
Violations – Open	6.12.6.1 a
Warning	6.12.6.2 a
Wind Flags 50m / 300m	6.4.4
Wind Flags 50m / 300m Check before the Preparation Time	6.4.4.6
Women's Events / Men’s Events	6.1.2 h
World Records	6.14.9
World Records – Finals	6.14.9.1
World Records – Juniors	6.14.9.3
World Records – Verification	6.14.9.5
Wrist Worn Devices	6.7.4.4
Written Protests	6.16.3

EDITION 2017 | Second Print 01/2018
Copyright: ISSF

Written Protests – Decision forwarded to the ISSF Headquarters	6.16.7

Copyright: ISSF

ANNEX – RULES FOR PAPER TARGET SCORING

Introduction:

Starting with the 2017-2020 ISSF Rules, ISSF rules for paper target scoring were removed from the ***ISSF General and Special Technical Rules*** and consolidated in this Annex A to the ***ISSF General Technical Regulations***. The Olympic Games shooting events and all ISSF World Championships, World Cups and Junior World Cups must now be conducted on electronic scoring targets, but the ISSF recognizes that some Continental Championships and many national, regional and club level competitions continue to use paper targets. These ***Rules for Paper Target Scoring*** are valid for governing competitions that use paper target scoring. Other ISSF Rules, as appropriate, must be used to govern all other competition operations.

1 PAPER TARGETS AND SCORING GAUGES

1.1 Official ISSF Targets

1.1.1 The target and scoring ring dimensions and specifications for all ISSF approved targets shall be as described in Rule 6.3.4.

1.1.2 Targets are divided into scoring zones by scoring rings. The dimensions of all scoring rings are measured from the outside edges (outside diameter) of the scoring rings.

1.1.3 In ISSF Championships, only targets with one (1) black aiming area are permitted, except for Running Target.

1.1.4 Sighting targets must be marked clearly with a black diagonal stripe in the upper right hand corner of the target. The stripe must be clearly visible to the naked eye at the appropriate distance under normal light conditions (except for the 25m Rapid Fire Pistol Target and the 50m Running Target).

1.2 Target Testing Requirements (applies only to ISSF Championships)

1.2.1 Samples of all paper targets (5 of each type) that are to be used in ISSF Championships must be submitted to the ISSF Secretary General for testing, verification of specifications and approval at least six (6) months prior to each Championship.

1.2.2 **The quality and dimensions** of all targets must be examined again by the Technical Delegate(s) prior to the beginning of the Championship. Only targets that are the same as the approved samples may be used.

EDITION 2017 | Second Print 01/2018
Copyright: ISSF

1.3 Target Scoring

1.3.1 Targets must be scored with scoring gauges that comply with Rule 1.4 (below) or with ISSF approved electronic scoring systems.

1.3.2 Rifle and Pistol targets may be scored in full ring values or if approved electronic scoring system are used, in decimal ring values. Decimal ring scores are determined by dividing the scoring area for one full ring into ten equal scoring rings that are designated with decimal values starting with zero (i.e. 10.0, 9.0, etc.) and ending with nine (i. e. 10.9, 9.9, etc.);

1.3.3 **Target paper** must have a non-reflecting color and surface that makes the black aiming area (center) clearly visible at appropriate distances under normal light conditions. The target paper and scoring rings must retain dimensional accuracy under all weather and climatic conditions. The target paper must register shot holes without excessive tearing or distortion.

1.4 Scoring Gauges and Their Use

When paper targets are used, ISSF approved electronic scoring systems or scoring gauges must be used to score doubtful shot holes. Scoring gauges must comply with the following requirements:

1.4.1 25m Center Fire Pistol

Measuring edge diameter:	9.65 mm (+0.05/-0.00 mm)
Edge thickness:	0.50 mm approximately
Spindle diameter:	According to the caliber being used
Spindle length:	10 mm to 15 mm
To be used for:	Center Fire Pistol events

1.4.2 300m Rifle

Measuring edge diameter:	8.00 mm (+0.05/-0.00 mm)
Edge thickness:	0.50 mm approximately
Spindle diameter:	According to the caliber being used
Spindle length:	10 mm to 15 mm
To be used for:	300m Rifle events

Copyright: ISSF

1.4.3 Small bore Rifle and Pistol 5.6 mm (.22”)

Measuring edge diameter:	5.60 mm (+0.05/-0.00 mm)
Edge thickness:	0.50 mm approximately
Spindle diameter:	5.00 mm (+0.05 mm)
Spindle length:	10 mm to 15 mm
To be used for:	All events using 5.6 mm ammunition

1.4.4 4.5 mm INWARD Gauges

Measuring edge diameter:	4.50 mm (+0.05/-0.00 mm)
Edge thickness:	0.50 mm approximately
Spindle diameter:	Measuring edge diameter minus 0.02 mm (4.48 mm)
Spindle length:	10 mm to 15 mm
To be used for:	Measuring the 1 and 2 rings of Air Rifle and 10m Running Targets. Measuring the 1 ring of Air Pistol Targets.

1.4.5 Use of the Air Pistol OUTWARD scoring gauge for scoring Air Rifle Inner tens

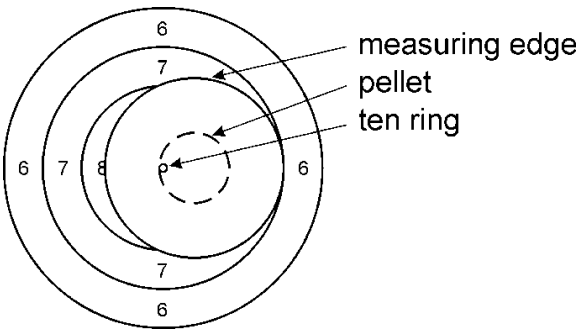	If the measuring edge of an Air Pistol Outward scoring gauge does not extend outside the 7 ring of an Air Rifle target, then the shot value is an inner ten.

EDITION 2017 | Second Print 01/2018
Copyright: ISSF

1.4.6 Use of the Air Pistol INNER TEN OUTWARD scoring gauge for scoring Air Pistol Inner tens

Measuring edge diameter:	18.0 mm (+0.00/-0.05 mm)
Edge thickness:	0.50 mm approximately
Spindle diameter:	4.60 mm (+0.05 mm)
Spindle length:	10 mm to 15 mm
To be used for:	Measuring the inner tens of Air Pistol
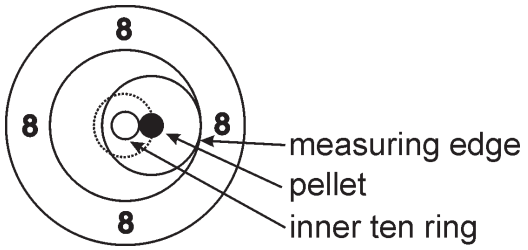	If the measuring edge of an Air Pistol Inner Ten Outward scoring gauge does not extend outside the 9 ring of an Air Pistol target then the shot value is an inner ten.

1.4.7 4.5 mm OUTWARD Gauge for 10m Air Rifle and 10m Running Target

Measuring edge diameter:	5.50 mm (+0.00/-0.05 mm)
Edge thickness:	0.50 mm approximately
Spindle diameter:	4.60 mm (+0.05 mm)
Spindle length:	10 mm to 15 mm
To be used for:	10m Air Rifle and 10m Running Target, rings 3 to 10. Also the Running Target Inner Ten.

Copyright: ISSF

1.4.8 Use of the Air Rifle OUTWARD scoring gauge

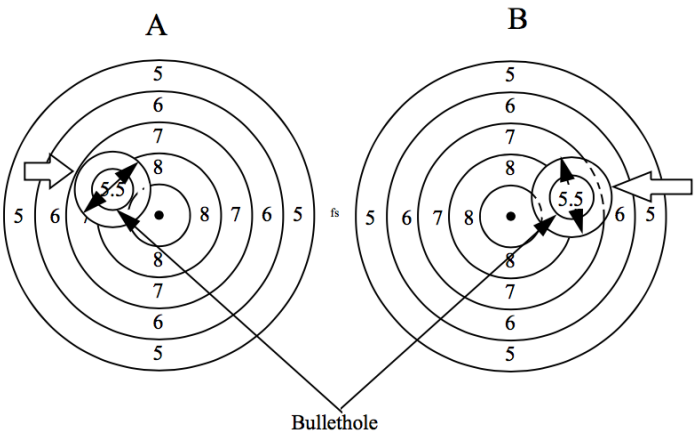

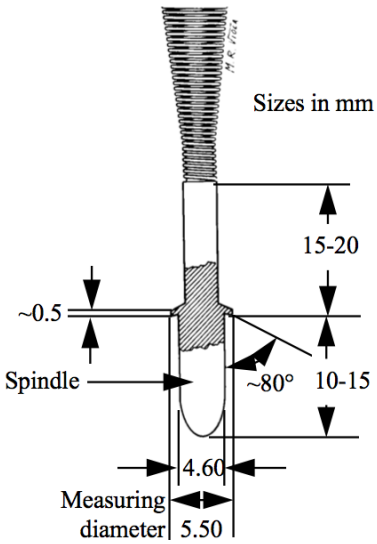

Illustration “A” depicts a doubtful shot hole. The outward scoring gauge shows the outside edge of the flange lying within the 7 ring; therefore the shot is scored a 9.

Illustration “B” depicts a doubtful shot hole. The outward scoring gauge shows the outside edge of the flange lying over the 7 ring and into the 6 zone; therefore the shot is an 8.

1.4.9 4.5 mm OUTWARD Gauge for 10m Air Pistol

Measuring edge diameter:	11.50 mm (+0.00/-0.05 mm)
Edge thickness:	0.50 mm approximately
Spindle diameter:	4.60 mm (+0.05 mm)
Spindle length:	10 mm to 15 mm
To be used for:	10m Air Pistol, rings 2 to 10.

EDITION 2017 | Second Print 01/2018
Copyright: ISSF

1.4.10 Use of Air Pistol OUTWARD scoring gauge

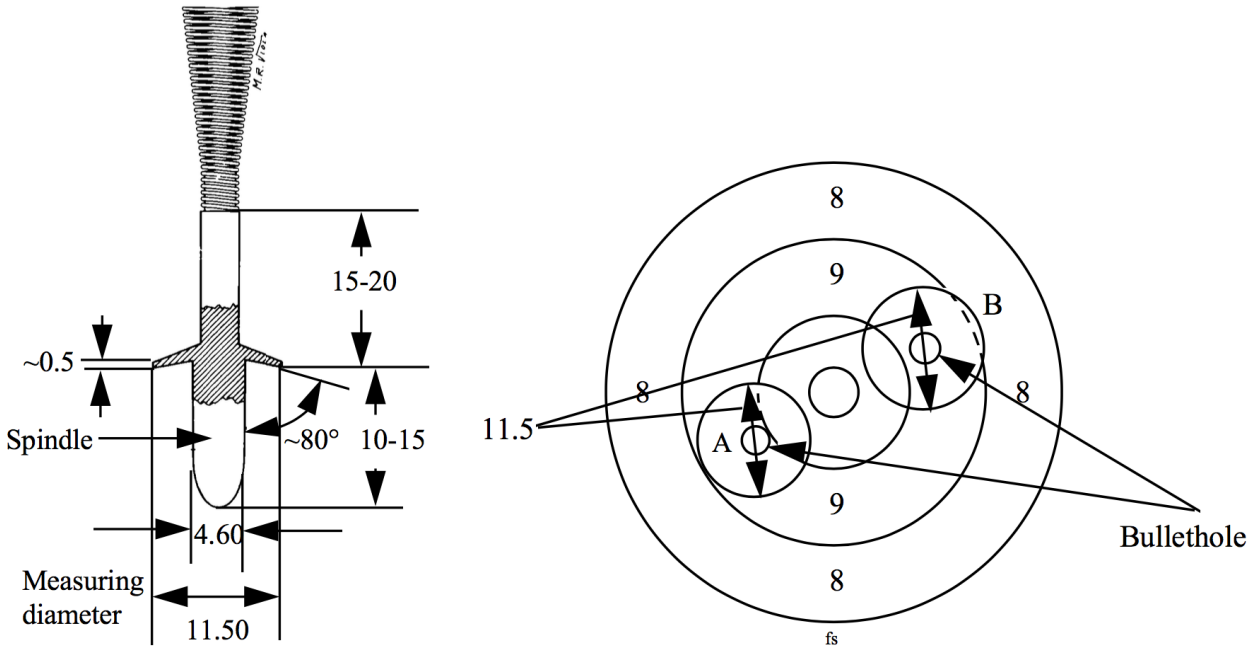

Illustration “A” depicts a doubtful shot hole with the outward scoring gauge in place. The outside edge of the flange is within the 9 ring; therefore the shot is scored a 10.

Illustration “B” depicts a doubtful shot hole with the outward scoring gauge in place. The outside edge of the flange is lying over the 9 ring line and into the 8 zone; therefore the shot is scored a 9.

1.4.11 Skid Gauge

The Skid Gauge is of flat, transparent plastic with two parallel lines marked on one side.

a) For 25m Center Fire Pistol (9.65 mm) the lines are 11.00 mm (+0.05 mm - 0.00 mm) apart measured between the inside edges; and

b) For Small Bore Competitions (5.6 mm) the lines are 7.00 mm (+0.05 mm – 0.00 mm) apart measured between the inside edges. (To be used for 25m 5.6 mm Pistol events).

2 RANGE AND FIRING POINT EQUIPMENT

2.1 Backing Targets

Backing targets must be used with 50m and 300m targets in accordance with 6.3.5.2. The area immediately behind the targets must be covered by Control Sheets. New Control Sheets must be provided for each athlete for each stage.

Copyright: ISSF

2.2 Backing Targets for 25m

a) Backing Targets must be used for all 25m Pistol events to assist in the identification of shots that may have missed the targets;

b) Backing Targets must, at a minimum, cover the entire width and height of the 25m frames (5 targets). They should be located a uniform distance of one (1) meter behind the competition targets. They must be continuous, or on adjoining frames, without any spaces between them, to register any shots between competition targets;

c) Backing Targets must be made of non-reflecting paper of a neutral color similar to the color of the target; and

d) For 25m events, new Backing Targets must be provided for each athlete for each stage.

2.3 Target Changing Systems

2.3.1 10m ranges must be equiped with target carriers or target changing systems that allow targets to be changed after each shot.

2.3.2 50m ranges must be equiped with target changing boxes, carriers or pit systems that allow targets to be changed after every shot.

2.3.3 300m ranges must be equiped with target carriers that allow targets to be pulled and marked after each shot.

2.4 Firing Point Requirements if Register Keepers are Used

2.4.1 A desk, chair and spotting telescope must be provided.

2.4.2 A scoreboard, approximately 50 cm x 50 cm, on which the Register Keeper can post unofficial scores for spectators should be provided. The scoreboard should be located so that it may easily be seen by spectators, but does not obscure their views of the athletes.

2.5 Standards for 25m Turning Target Installations

Target frames for the 25m Rapid Fire Pistol event must be placed in groups of five (5), all at the same height (+1cm), all functioning simultaneously and all facing one firing point which is centered on the middle target of the group. The distance between target centers, axis to axis, in a group of five (5) must be 75 cm (+1cm).

EDITION 2017 | Second Print 01/2018
Copyright: ISSF

2.5.1 Ranges must be equipped with target rotating or turning mechanisms that permit 90 degree (±10 degrees) turning of the targets on their vertical axis. In precision stages of 25m Pistol events, stationary target frames may be used.

a) The time for turning to face the athlete must not exceed 0.3 seconds;

b) When the targets turn, there must be no visible vibration to distract the athlete; and

c) When viewed from above, the targets must turn in a clockwise direction to the facing position and in a counterclockwise direction to the edge-on position.

Rotation of Turning Targets

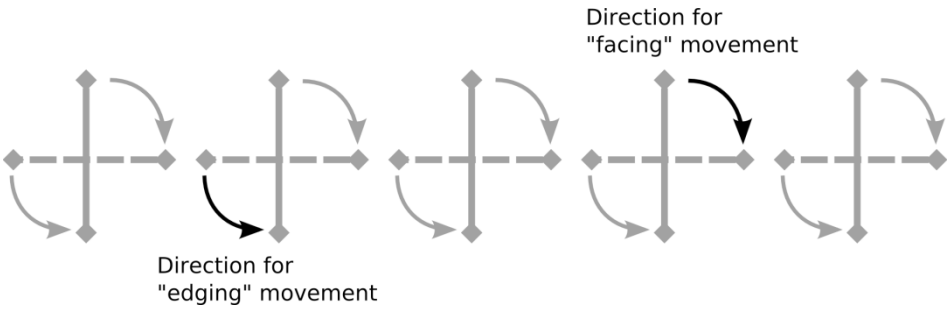

d) The targets in a section must all turn simultaneously which must be achieved by use of a mechanism that provides efficient operation and accurate timing.

2.5.2 The automatic turning and timing device must ensure, accurate and consistent timing and that targets remain in the facing position for the specified period of time and that targets return to the edge-on position after the specified time (+0.2 seconds – 0.0 seconds).

a) Timing must start the moment the targets begin to face and stop the moment they begin to turn away; and

b) If the time is less than specified or greater than 0.2 sec, the Range Officer, acting either on his own or on instructions from a Jury Member, must stop the shooting to allow the timing mechanism to be regulated. In such cases, the Jury may postpone the start or restart of shooting.

2.5.3 Facing times for 25m Pistol Qualification Events are:

a) 25m Rapid Fire Pistol: 8, 6 and 4 seconds;

b) 25m Standard Pistol: 150, 20 and 10 seconds;

c) 25m Pistol and 25m Center Fire Pistol Rapid Fire Stage: Facing for three (3) seconds for each shot, alternating with an edge-on face away time of seven (7) seconds (±0.1 second); and

d) For all facing times, a tolerance of +0.2 seconds – 0.0 seconds is allowed.

Copyright: ISSF

2.5.4 If solid backing boards are used for the targets, the area corresponding to the eight (8) ring zone must either be cut out from the backing board or be made of cardboard to facilitate scoring.

3 COMPETITION OFFICIALS DUTIES

3.1 Jury Member Duties – 25m Events Only

a) For 25m events when using paper targets, a Member of the RTS Jury and/or the Pistol Jury must be appointed for each Range Section or for each five (5) to ten (10) targets (i.e. one per Target Officer). He must accompany the Target Officer at the Target Line;

b) The Jury Member must check that the targets are inspected before scoring commences, looking for the correct number of shots, proximity to the scoring lines, etc. Doubtful situations must be resolved before scoring commences;

c) Decisions on doubtful shots must be made simultaneously by two (2) Jury Members and the Target Officer. One member of the Jury will act as chairman and will insert the scoring gauge, if necessary;

d) The Jury Member at the Target Line must ensure that all results recorded by the Second Register Keeper at the Target Line are correct and that Jury decisions are duly noted and certified on the score cards; and

e) The Jury Member must ensure that the targets are not patched, and shots are not indicated by the colored discs until after doubtful shots have been resolved and the score has been recorded correctly by the Second Register Keeper.

EDITION 2017 | Second Print 01/2018
Copyright: ISSF

3.2 Register Keeper Duties and Functions

When paper targets are used, a Register Keeper may be appointed for each firing point. Register Keepers must:

a) Fill out or verify the corresponding information on the scorecard and scoreboard, (athlete's name, Bib Number, firing point number, etc.);

b) Have a telescope if remote operated target changing is used. If the Register Keeper controls the target changing, he must wait a few seconds before signaling to change the target, in order to give the athlete the opportunity to spot his shot;

c) Enter the preliminary value of every shot on the scorecard and on the scoreboard above or beside his desk for the benefit of the spectators; and

d) On ranges where the targets are returned mechanically to the firing line, collect the targets immediately after each series of ten (10) shots and place them in a locked container to be collected by authorized personnel for delivery to the RTS Office.

3.3 Target and Pit Officers Duties and Functions – 50m and 300m

a) The number of Pit Officers should correspond to the number of Range Officers. In pit operations, they are responsible for their assigned Range Section or group of targets to ensure that targets are changed rapidly, scored, marked and raised for the athlete's next shot. Pit Officers must:

b) Ensure that there are no shot holes on the white surface of the target, and that any shot marks on the frame are clearly marked;

c) If a shot hole cannot be located on a target, the Pit Officer is responsible for determining whether the shot hole is on a neighboring target and, in consultation with the Jury and Range Officer, for resolving the situation;

d) When automatic target boxes are used, Pit Officers are responsible for loading the correct targets in the boxes, for removing the targets and preparing them for delivery to the Scoring and Results Office; and

e) They are also responsible for marking on the targets any irregularities that may have occurred.

Copyright: ISSF

3.4 25m Target Officer

A Target Officer must be appointed for each Range Section or for each five (5) to ten (10) targets. The number of Target Officers must correspond to the number of Range Officers. The Target Officer must:

a) Be responsible for the group of targets entrusted to him;

b) Must call all hits of doubtful value to the attention of the Jury Member and, after a decision is made, must signal the location and value of shots;

c) Ensure that targets are scored rapidly, accurately and efficiently marked, patched and/or changed, as necessary and as required by the Rules; and

d) Assist in the resolution of doubtful situations according to ISSF Rules in co-ordination with the Range Officer and the Jury.

3.5 Second 25m Register Keeper – Paper Targets

All stages of all the 25m events are scored officially on the range. The Second Register Keeper is at the target line. He must record scores on scorecards as called by the Target Officer. If there is a difference between the score marked by the Register Keeper and the Second Register Keeper that cannot be resolved, the score recorded by the Second Register Keeper will be valid.

3.6 25m Target Marker – Paper Targets

After scoring is completed, the Target Marker will patch the holes on the target, Control Sheets, and Backing Targets, or change the targets or Control Sheets as directed.

4 COMPETITION PROCEDURES

4.1 Handling 10m Air Rifle and Air Pistol Paper Targets

a) Changing targets is done by the athletes under the supervision of the Range Officers;

b) The athlete is responsible for shooting on the correct targets; and

c) Immediately after each series of ten (10) shots, the athlete must put the ten (10) targets in a convenient place for the Register Keeper who must put them in a secure container to be collected by authorized personnel for delivery to the RTS office.

EDITION 2017 | Second Print 01/2018
Copyright: ISSF

4.2 Handling 50m Rifle and 50m Pistol Paper Targets

a) If **automatic target carriers** or changers are used, the athlete may control target changing or target changing may be controlled by the Register Keeper;

b) In either case, the athlete is responsible for shooting on the correct target; and

c) If the athlete considers the **marking or target changing to be too slow**, he may report this to a Range Officer. If the Range Officer or the Jury considers the claim justified, they must correct the situation. If the athlete or a team official considers there is no improvement, the athlete or a team official may protest to the Jury. The Jury may grant a time extension up to a maximum of 10 minutes. Such claims cannot be made in the last 30 minutes of MATCH firing except in unusual circumstances.

4.3 Too many shots per paper target

a) If an athlete fires **more shots** at one of his MATCH targets than are provided for in the event, he must not be penalized for the first two (2) shots;

b) For the third and all succeeding such misplaced shots he must be penalized by a deduction of two (2) points for the third and subsequent misplaced shots in that event;

c) The two (2) point deduction must be taken from the series in which the third or any subsequent misplaced shots occur. He must also fire a fewer number of shots at the remaining targets so that the number of shots does not exceed that provided for in the program;

d) The scoring process in this situation requires the transfer of the value of the excessive shot(s) to targets with less than the originally programmed number of shots, thus bringing each target to the full number of shots designated in the program and the Rules;

e) If the actual shot(s) to be transferred cannot be clearly established, the shot(s) with the lowest value must be transferred forward to the next target(s) or the shot(s) with the highest value must be transferred back to the previous target(s) so that the athlete will gain no advantage in a “count back” situation; and

f) All Three-Position Rifle events are considered to be one (1) event.

Copyright: ISSF

4.4 **When Sighting Shots Are Authorized**. When sighting shots are authorized during a competition because an athlete is interrupted or moved to another firing point and the use of automatic paper target systems makes it impossible to provide a new sighting target, the sighting shots should be fired on the next unused competition target. Two (2) competition shots should be fired at the next competition targets according to the instructions given by the Range Officer or Jury Members;

5 SCORING PROCEDURES

5.1 RTS Office Scoring

When paper targets are used for the following events, those targets must be scored in the RTS Office:

a) 10m, 50m and 300m Rifle events;

b) 10m and 50m Pistol events;

c) 10m and 50m Running Target events; and

d) All results in these events or stages that are scored at the shooting range are considered preliminary results.

5.1.1 The **RTS Jury** must supervise the scoring and all work done in the Scoring & Results Office and, when paper targets are used, on the 25 meter target line. It directs how questionable shots are scored, determines their value, and resolves any questions or scoring protests.

5.1.2 All targets for events to be scored in the RTS Office must be transported in a locked container from the target line to the RTS Office under suitable security immediately after they have been fired.

5.1.3 Competition targets for events that are scored in the RTS Office must be numbered and must agree with the scorecard. The RTS Office is responsible for the correct numbering of the targets and must verify the targets prior to every event before they are released to the Chief Range Officer or other range officials.

EDITION 2017 | Second Print 01/2018
Copyright: ISSF

5.1.4 In the RTS Office, the following scoring procedures must be checked by a second official:

a) Determining the value of individual shots;

b) Determining and counting inner tens;

c) Adding shot values or points to be deducted;

d) Adding the individual series and overall total; and

e) Each official must certify his work by initialing the target, scorecard or results list.

5.2 Determining Shot Values – Paper Targets

5.2.1 All shot holes are scored according to the highest value of any target scoring zone or ring that is hit or touched by that bullet hole. If any part of a higher value scoring ring is touched by a bullet hole, the shot must be scored the higher value of the two scoring zones. This is determined by whether the bullet hole or a plug gauge inserted in the hole touches any part of the outside edge of the scoring ring.

An exception to this Rule is the scoring of inner tens on the Air Rifle target.

5.2.2 Shots in dispute must be determined as to value by means of a gauge or other device. Gauges must always be inserted into the shot hole with the target in a horizontal position.

5.2.3 When the accurate use of the scoring gauge is made difficult by the close proximity of another bullet hole, a badly torn bullet hole or overlapping bullet holes, the shot value must be determined by using a flat, transparent material (overlay) with an engraved ring of the appropriate size on it. Such a scoring gauge will aid in reconstructing the true position of a bullet hole and scoring ring.

5.2.4 If two scoring officials do not agree on the value of a shot, a decision from the Jury must be requested immediately.

5.2.5 The scoring gauge may be inserted only once in any bullet hole and only by a Jury Member. For this reason the use of a gauge must be marked on the target by the scoring officials, together with their initials, and showing the result.

5.3 25m Paper Targets Scoring Procedures

The Jury must supervise all scoring procedures. The scorecard (kept by the Second Register Keeper) must be signed by the Target Officer and the Target Line Jury Member. This original card must be sent to the RTS Office by a secure means, for verification of addition and final recording.

Copyright: ISSF

5.3.1 Skid Shots

a) Shots fired while the target is in motion must not be scored as hits unless the greatest horizontal dimension of the bullet hole (surface lead/bullet marking on the target is ignored) is less than 7.0 mm in the 25m rimfire 5.6 mm (.22” cal.) events, or 11.0 mm in the 25m Center Fire Pistol event; and

b) The horizontally elongated bullet hole in the target must be measured with a skid gauge. When the inside edge of the engraved lines on the skid gauge touches a scoring ring, the score will count as the higher value of the two zones.

5.3.2 As soon as the Target Officer receives the signal that the range is safe, the targets must be faced. The Target Officer, along with at least one Jury Member, must signal the values of the bullet holes on each target and call them loudly to the Register Keeper on the firing line. The Register Keeper records them on the Range Register and/or on the small scoreboard near his desk. The Second Register Keeper must accompany the Target Officer and record the shot values on a scorecard. The position and value of the shot on the target must be indicated to the athlete and spectators as follows:

a) By using colored spotting discs in the 25m Rapid Fire Pistol event: These discs should have a diameter of 30 mm to 50 mm. They must be colored red on one side and white on the other. They should have a spindle through the center of the disc extending on both sides of approximately 5 mm diameter and 30 mm in length. After every five (5) shot series, and after the value of the shots has been decided and called, the discs must be placed in the bullet holes by the Target Officer;

b) A ten must be indicated with the red side facing the athlete. Values less than ten must be indicated with the white side facing the athlete. After the hits have been indicated in this manner, the total result for the series must be shown the small scoreboard near his desk, and recorded by the Second Register Keeper. The series total must also be announced. The discs must then be removed and the targets patched;

c) In the 25m Standard Pistol, 25m Pistol and 25m Center Fire Pistol events, shot values and locations are indicated by means of a wand with a handle approximately 300 mm long and with a small disc on one end with a diameter of 30 mm to 50 mm, colored red on one side and white on the other. The disc must be placed over the bullet hole(s) in the ten ring with the red side facing the athlete, as the Target Officer calls the value of the hit(s). For bullet holes with a value less than ten, the white side must be shown. Where a series of shots are fired at the same target, the scores should be called commencing with the tens. The total for the series should be called after all shots have been indicated individually; and

d) Sighting shots must be indicated and recorded.

EDITION 2017 | Second Print 01/2018
Copyright: ISSF

5.3.3 The Target Officer and the Range Officer must verify that the results on the scoreboard are the same as recorded at the Target Line. Should there be any difference of opinion regarding the recording of a shot value, the matter must be resolved immediately.

5.3.4 As soon as shots are indicated and recorded:

a) The targets must be patched and made ready for the next series (Rapid Fire Pistol event and Rapid Fire Stages); or

b) The targets must be replaced and the Backing Targets patched or replaced for the next series; or

c) The targets and Backing Targets must be removed and replaced with new targets for the next athlete.

5.3.5 Before leaving the range, the athlete should sign the completed scorecard next to the score total to identify his score.

5.4 Tie-Breaking

Tie breaking shall be done according to GTR 6.15

5.5 Paper Target Score Protests

5.5.1 When using paper targets, an athlete or team official who considers that a shot was scored or recorded incorrectly may protest that score, except that decisions made regarding the value of shots by using gauges are final and cannot be protested. A protest can only be made for one specific shot. Should other shots be protested, a separate fee is payable.

5.5.2 Scoring protests may only be made on scores that have been decided without using a gauge or when incorrect entries in the result list or score card appear to have been made.

5.5.3 The protest fee (50,00 EUR) must be paid when the protest is made.

5.5.4 When paper targets are used and scored in the RTS Office, the team official or athlete has a right to see the protested shot hole(s), but is not permitted to touch the target(s).

Copyright: ISSF

6 300M SCORING AND MARKING PROCEDURES

6.1 As soon as the Target Marker receives a signal that a shot has been fired on that target, he must indicate the shot. The **indication of shots** must be carried out in accordance with the following system. As soon as the Marker in the pit receives a signal for marking, he must:

a) **Lower** the target;

b) **Cover** the hole with a transparent sticker and overlay a contrasting sticker to mark the location of the last shot;

c) **Raise the target; and**

d) **Show** the value of the hit by the discing system.

6.2 When a spotting disc is used to indicate shot values, it must be done with a circular disc 200 mm to 500 mm in diameter. It is painted black on one side and white on the other and mounted on a thin staff which is normally fastened on the white side 30 mm to 50 mm to the right of the center.

6.3 The **value** of hits will be shown as follows (see diagram):

a) The position of the **last hit** must be marked;

b) The value of hits scoring 1, 2, 3, 4, 5, 6, 7 or 8 points must be shown by placing the disc, **black side toward the firing line**, on the appropriate spot on the target frame in the raised position as shown in the following figure;

c) If the **hit is a nine**, the disc must be moved up and down twice over the black aiming bulls-eye on the target with the white side of the disc facing the firing line;

d) If the **hit is a ten**, the disc, with the white side facing the firing line, must be moved twice in a clockwise circle in front of the black aiming mark, as shown in the following figure;

e) A shot that does **not hit the target** is marked only by moving the black side of the marking disc three (3) or four (4) times sideways across the face of the target; and

f) If the hit is on the target card, but **not in the scoring area**, it is marked by first indicating a miss and then by showing the position of the hit.

EDITION 2017 | Second Print 01/2018
Copyright: ISSF

6.4 Shot Signal Diagram

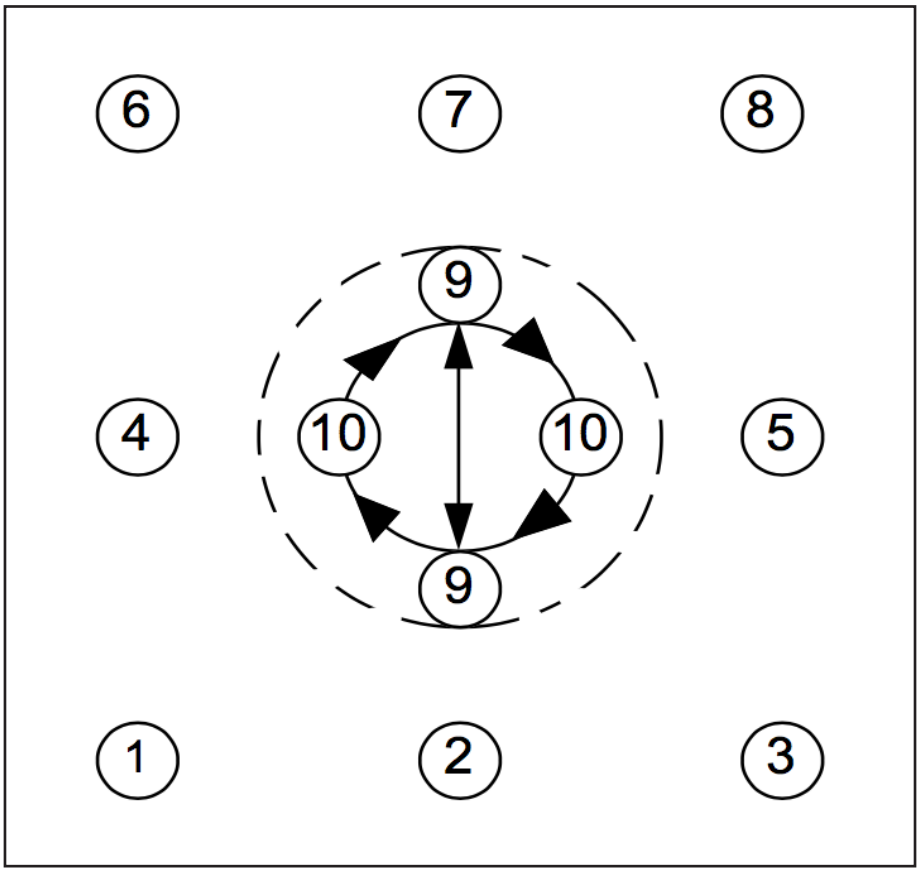

6.5 **The** sighting target must be marked clearly with a black diagonal stripe on the upper right hand corner of the target. The stripe must be clearly visible to the naked eye at the appropriate distance in normal light conditions. In the case of pit operated targets, the sighting target must not appear at all while the athlete is firing MATCH shots.

Copyright: ISSF

International Shooting Sport Federation
Internationaler Schiess-Sportverband e.V.
Fédération Internationale de Tir Sportif
Federación Internacional de Tiro Deportivo

7. RIFLE RULES

FOR
10m Air Rifle
50m Rifle
300m Rifle
300m Standard Rifle

EDITION 2017 | Second Print 01/2018
Copyright: ISSF

Chapters

7.1	**GENERAL**	***380***
7.2	**SAFETY**	***380***
7.3	**RANGE AND TARGET STANDARDS**	***380***
7.4	**RIFLES AND AMMUNITION**	***380***
7.5	**CLOTHING REGULATIONS**	***389***
7.6	**SHOOTING EVENT PROCEDURES AND COMPETITION RULES**	***399***
7.7	**RIFLE EVENTS**	***401***
7.8	**INDEX**	***404***

NOTE:

Where figures and tables contain specific information, these have the same authority as the numbered rules.

Copyright: ISSF

7.1 GENERAL

7.1.1 These Rules are part of the ISSF Technical Rules and apply to all Rifle events.

7.1.2 All athletes, team leaders and officials must be familiar with the ISSF Rules and must ensure that these Rules are enforced. It is the responsibility of each athlete to comply with the Rules.

7.1.3 When a Rule refers to right-handed athletes, the reverse of that Rule refers to left-handed athletes.

7.1.4 Unless a Rule applies specifically to a men's or a women's event, it must apply uniformly to both men's and women's events.

7.2 SAFETY

SAFETY IS OF PARAMOUNT IMPORTANCE

ISSF Safety Rules are found in Rule 6.2.

7.3 RANGE AND TARGET STANDARDS

Target and target standards are found in Rule 6.3. Requirements for ranges and other facilities are found in Rule 6.4.

7.4 RIFLES AND AMMUNITION

7.4.1 Standards for All Rifles

7.4.1.1 **Single Loader Rifles**. Only single shot rifles that must be manually loaded before each shot may be used, except that in the 300m Standard Rifle event a rifle that is legal for use in International Military Sport Council (CISM) 300m Rifle events may be used if it is checked by Equipment Control before the event.

7.4.1.2 **One Rifle Per Event.** Only one (1) rifle is allowed to be used in the Elimination, Qualification and Final Rounds of one (1) event. The action, barrel and stock may not be exchanged, except that a detachable butt-stock may be exchanged. Accessories attached to the action, barrel or stock may be exchanged. A rifle that becomes disabled may be replaced according to Rule 6.13.3, if the Jury approves.

7.4.1.3 **Movement or Oscillation Reduction Systems.** Any device, mechanism or system that actively reduces, slows or minimizes rifle oscillations or movements before the shot is released is prohibited.

7.4.1.4 **Pistol Grips.** The pistol grip for the right hand must be constructed in such a way that it does not rest on the sling or on the left arm.

EDITION 2017 | Second Print 01/2018
Copyright: ISSF

7.4.1.5 **Barrels** and extension tubes must not be perforated in any way. Compensators and muzzle brakes on rifles are prohibited. Any construction or device inside the barrel or tubes, other than rifling and chambering for the cartridge or pellet, is prohibited.

7.4.1.6 Sights

a) The front or rear sights may have light or tinted lenses or a polarizing filter, but the sights may not have any system of lenses;

b) No Light enhancing system, optical sight, optical system or telescope may be attached to the rifle;

c) A single corrective lens may be attached to the rear sight only; or the athlete may wear corrective or tinted lenses;

d) Any aiming device programmed to activate the firing mechanism is prohibited;

e) A blinder may be attached to the rifle or to the rear sight. The blinder must not be more than 30 mm deep (A) nor extend further than 100 mm (B) from the center of the rear sight aperture on the side of the non-aiming eye. A blinder must not be used on the side of the aiming eye; and a prism or mirror device may be used when shooting from the right shoulder while aiming with the left eye, providing it does not have a magnifying lens system. It must not be used when shooting from the right shoulder when using the right eye.

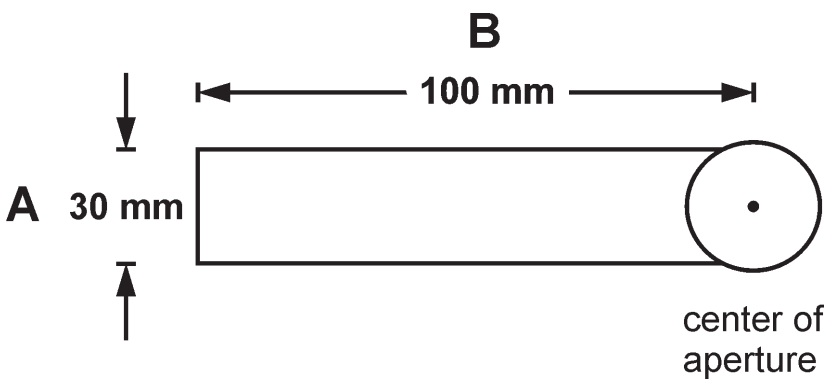

Rear Sight Blinder

Copyright: ISSF

7.4.1.7 Electronic triggers are allowed providing:

a) All components are firmly attached to and contained within the action or stock of the rifle so that the battery and wires are not visible externally;

b) The trigger is operated by the right hand of a right-handed or the left hand of a left-handed athlete;

c) All components are included when the rifle is submitted for inspection by Equipment Control; and

d) The rifle with all components installed complies with the rules governing dimensions and weight for that event.

7.4.2 Standards for 300m Standard Rifle and 10m Air Rifle

Measurements stated in this rule are also illustrated in the RIFLE MEASUREMENTS DIAGRAM, 7.4.4.1 and in the RIFLE MEASUREMENTS TABLE, 7.4.4.2.

7.4.2.1 The butt-plate may be adjustable up or down. The butt-plate may be offset to the right or left of the butt-stock center and/or the butt-plate may be turned on its vertical axis. If a multi-part butt-plate is used, ALL parts of the butt-plate must be offset or turned in the same direction from the butt-stock center. No part of the butt-plate (outer edges) may extend more than 30 mm from the butt stock center-line. The butt-stock center line is a vertical line that is perpendicular to the center-line of the bore.

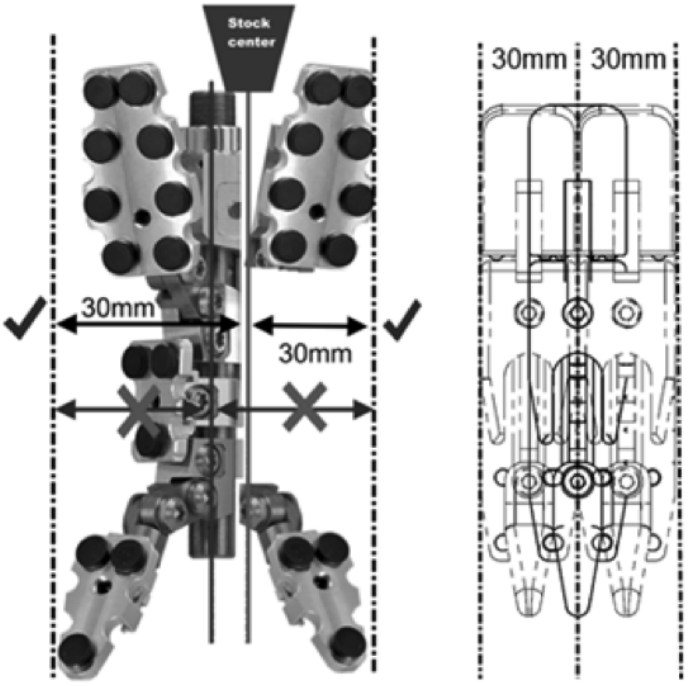

EDITION 2017 | Second Print 01/2018
Copyright: ISSF

7.4.2.2 A thumb hole, thumb rest, palm rest, heel rest and spirit level are prohibited. A heel rest is any protrusion or extension on the front or side of the pistol grip designed to prevent the hand from slipping. The pistol grip, cheek-piece or lower part of the stock may not be anatomically formed.

7.4.2.3 The pistol grip must not extend laterally (to the side) more than 60 mm from a vertical plane that is perpendicular to the center-line of the barrel.

7.4.2.4 The lowest point of the butt-stock, between the pistol grip and the butt-plate, may not be more than 140 mm below the center-line of the bore. This limit does not apply to wooden stocked rifles.

7.4.2.5 The lowest point of the fore-end may not be more than 120 mm below the center-line of the bore.

7.4.2.6 Material that gives increased grip may not be added to the fore-end, pistol grip or lower part of the stock.

7.4.2.7 Weights

a) Barrel weights within a radius of 30 mm from the center of the barrel are permitted. Barrel weights may be moved along the barrel;

b) Any devices or weights projecting downward or outward (laterally) from the butt-stock are prohibited;

c) Any devices or weights projecting forward or laterally from the lower part of the butt-plate are prohibited;

d) A weight may be attached to any part of the rifle, but the weight must be within the fundamental shape of the stock. Weights in the butt-stock area cannot extend further to the rear than a line that is perpendicular to the deepest point of the butt-plate. Weights cannot protrude out from the stock; and

e) Taping of any kind may not be used to attach weights to the rifle.

Copyright: ISSF

7.4.3 Standards for 300m Standard Rifle Only

All 300m Standard Rifles must conform to the specifications shown in the **Rifle Measurements Table** and with the following restrictions:

a) The minimum trigger pull is 1500 grams. The trigger pull must be measured with the barrel in a vertical position. Trigger weight control checks must be conducted immediately after the last series. A maximum of three (3) attempts to lift the weight are allowed. Any athlete whose rifle fails the test must be disqualified;

b) The same rifle must be used in all positions without change. The adjustment of the butt-plate and hand stop or the changing of front sight inserts or the adjustment of the rear sight or its eyepiece are permitted. The removal of the cheek piece during competition is permitted for barrel cleaning and bolt removal under supervision of the Jury; but its position must not be changed when it is replaced; and

c) The overall length of the barrel including any extension tube, measured from the breech face to the apparent muzzle, must not exceed 762 mm.

7.4.4 Standards for 10m Air Rifle Only

Any type of compressed air or gas rifle that conforms to the specifications in the **Rifle Measurements Table** and the following additional restrictions:

a) The total length of the air rifle system measured from the back end of the mechanism to the apparent muzzle must not exceed 850 mm; and

b) The front sight may not extend beyond the apparent muzzle.

EDITION 2017 | Second Print 01/2018
Copyright: ISSF

7.4.4.1 Rifle Measurements Diagrams

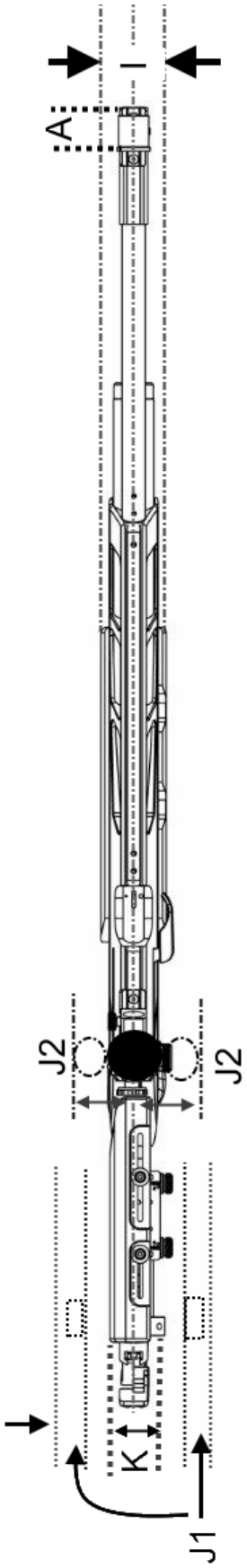

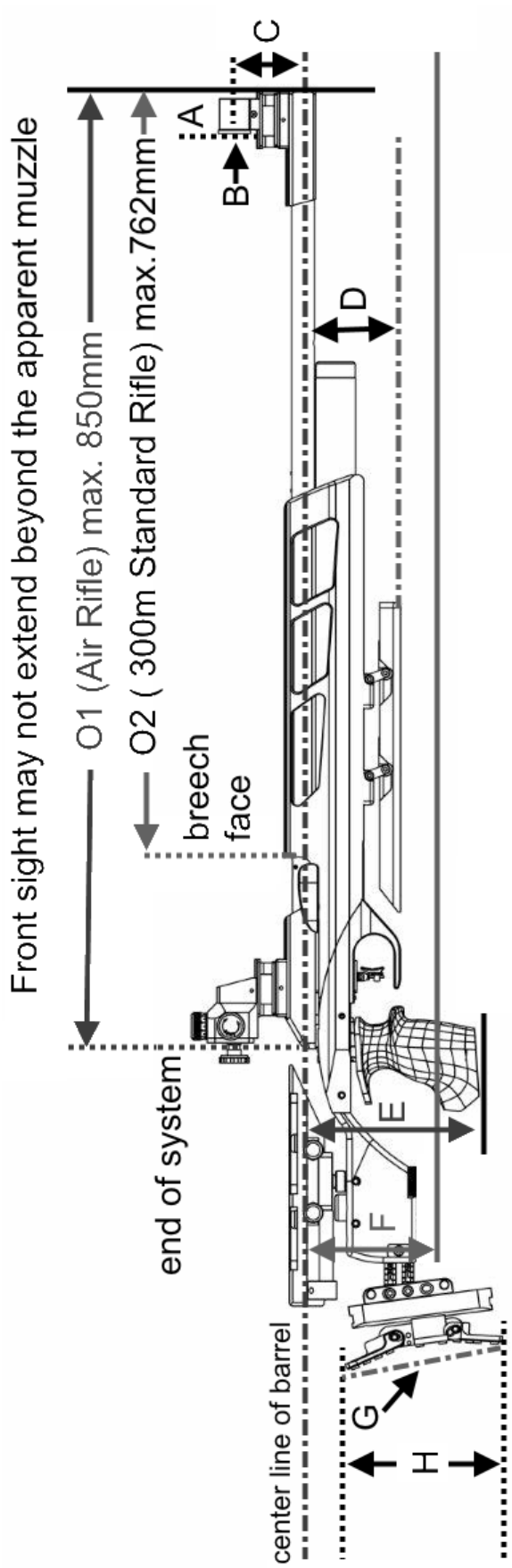

Copyright: ISSF

7.4.4.2 Rifle Measurements Table

Measurements for dimensions C, D, E, F, J1, J2 and K are from the center-line of the bore.

Key	RIFLE FEATURE	300m Standard Rifle	Air Rifle
A	Length of front sight tunnel	50 mm	50 mm
B	Diameter of front sight tunnel	25 mm	25 mm
C	Distance from center of the front sight ring or top of post to center of bore	60 mm	60 mm
D	Depth of fore-end	120 mm	120 mm
E	Lowest point of pistol grip	160 mm	160 mm
F	Lowest point of butt-stock between the pistol grip and the butt-plate (does not apply to wooden stocked rifles)	140 mm	140 mm
G	Depth of curve of butt-plate	20 mm	20 mm
H	Heel to toe length of butt-plate	153 mm	153 mm
I	Maximum thickness (breadth) of fore-end	60 mm	60 mm
J1	Maximum distance of cheek-piece from a vertical plane through the center-line of the barrel	40 mm	40 mm
J2	Maximum distance of any part of the pistol grip from a vertical plane through the center-line of barrel	60 mm	60 mm
K	Offset of the butt-plate as measured from the left or right edge of the butt-plate to butt-stock center (axis of butt-plate must be vertical, 7.4.2.1)	30 mm	30 mm
L	Trigger weight	1500 grams minimum	Free
M	Weight with sights (and hand stop 300m)	5.5 kg	5.5 kg
N	The front sight must not extend beyond the apparent muzzle of the rifle	Must not extend	Must not extend
O1	Air Rifle: Total length of the Air Rifle system	---	850 mm
O2	Standard Rifle: The overall length of the barrel including extension (from the muzzle to the breech face)	762 mm	---

EDITION 2017 | Second Print 01/2018
Copyright: ISSF

7.4.5 Standards for 50m Rifles

All rifles chambered for rimfire 5.6 mm (.22” cal.) long rifle cartridges are permitted:

a) The weight of the rifle may not exceed 8.0 kg for men with all accessories used including palm rest or hand stop;

b) The weight of the rifle may not exceed 6.5 kg for women, with all accessories used including the palm rest or hand stop;

c) Weights on or in the lower part of the stock or buttstock, may not extend horizontally (laterally) further from the center-line of the barrel than the distance of the maximum extension of the cheek-piece from the center-line of the barrel;

d) Weights cannot extend further to the rear than a line perpendicular to the deepest point in the butt-plate;

e) Weights attached to the butt-stock must be rigidly attached and may not be taped to the butt-stock;

f) Weights on the rifle fore-end may extend no lower than 90 mm below the center-line of the barrel and not further forward than 700 mm from the back (rear) end of the system; and

g) The lowest point on the butt-stock may not extend down more than 140 mm from the center-line of the bore. This limit does not apply to wooden stocked rifles

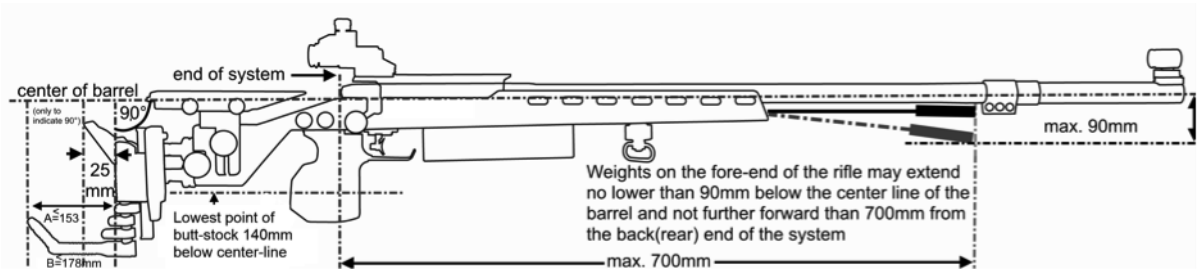

Copyright: ISSF

7.4.5.1 Hook Butt Plate

a) A hook butt-plate that complies with the following restrictions may be used;

b) The butt hook projecting rearward from the bottom of the butt-plate must not extend more than 153 mm (A) past the rear of a line that is perpendicular to a line drawn through the axis of the bore of the rifle, and that is tangent to the deepest part of the butt-plate depression that normally rests against the shoulder;

c) The butt hook projecting from the bottom of the butt-plate must have a total outside length around any curve or bend of not more than 178 mm (B);

d) The top projection of the butt-plate must not extend more than 25 mm to the rear of this perpendicular line; and

e) Any devices or weights projecting forward or laterally from the lower part of the butt-plate are prohibited.

7.4.5.2 Palm Rests

A palm rest is any removeable attachment or extension below the fore-end that aids the support of the rifle by the forward hand. Such extensions must not extend more than 200 mm below the center-line of the barrel.

7.4.5.3 Pistol Grips

No part of the pistol grip may be extended or constructed in any way that would allow it to touch or support the back of the hand or the wrist.

7.4.5.4 Standards for 300m Rifles

Standards for 300m rifles are the same as for the 50m Rifle (Men and Women). See 7.4.5 and the RIFLE SPECIFICATION TABLE (7.7.5).

300m rifles may have a mirage band with a maximum width of 60 mm.

7.4.6 Ammunition

Rifle	Caliber	Other specifications
50m	5.6 mm (.22")	Rimfire Long Rifle. Only bullets made of lead or similar soft material are permitted.
10m	4.5 mm (.177")	Projectiles of any shape made of lead or other soft material are permitted.
300m	Maximum 8 mm	Ammunition of any description that may be fired without any danger to athletes or range personnel. Tracer, armor piercing, and incendiary ammunition is prohibited.

EDITION 2017 | Second Print 01/2018
Copyright: ISSF

7.5 CLOTHING REGULATIONS

See the General Technical Rules for general standards regarding clothing and the testing of clothing (Rule 6.7).

7.5.1 General Standards for Rifle Clothing

7.5.1.1 All shooting jackets, shooting trousers and shooting gloves must be made of flexible material that does not materially change its physical characteristics, that is, become stiffer, thicker or harder, under commonly accepted shooting conditions. All lining, padding and reinforcements must meet the same specifications. Any lining or padding must not be quilted, cross-stitched, glued or otherwise affixed to the outer clothing layer other than at normal tailoring points. All lining or padding must be measured as a part of the clothing.

7.5.1.2 Only one (1) shooting jacket and only one (1) pair of shooting trousers may be used by each athlete in all Rifle events in any ISSF Championship. All Rifle shooting jackets and shooting trousers must have a seal with a unique serial number issued by ISSF Equipment Control and registered in an ISSF database. Athletes with jackets or trousers that do not have a seal must bring them to Equipment Control to have a seal attached and registered in the ISSF database. Only one jacket and one trouser may be registered to each athlete. Athletes with more than one jacket or trousers with ISSF seals must inform the ISSF Equipment Control which item will be used in future competitions and only one seal per item will remain. Athletes that change jackets or trousers or any with no seal (new or changed) must bring them to Equipment Control to obtain a seal and retire the previous seal (6.7.6.2.e). When an athlete is selected for post-competition testing, the test must confirm that the seal number registered to that athlete was the seal number on the clothing used by that athlete.

7.5.1.3 Ordinary athletic type training trousers or normal athletic type training shoes may be worn in any event or position. If shorts are worn during competitions, the bottom of the leg must be no more than 15 cm above the center of the kneecap. Sandals of any type may not be worn.

7.5.1.4 Athletes are responsible for ensuring that all items of clothing used by them comply with these Rules. The Equipment Control Section must be open to make voluntary inspections of athletes' clothing from the Official Training day until the last day of Rifle competition and athletes are encouraged to bring their Rifle clothing items for an Equipment Control check before the competitions to be sure they comply with these Rules. In preparing jackets and trousers for competitions, athletes must make allowances for any measurement variations that may occur because of changes in temperature, humidity or other environment conditions.

7.5.1.5 Post-competition checks will be made of all Rifle clothing items after Elimination and Qualification Round competitions to ensure compliance (6.7.9).

Copyright: ISSF

7.5.2 Clothing Measurement Standards

7.5.2.1 Clothing Thickness Standards Table

Rifle competition clothing must comply with these thickness measurement standards:

Measurement Location	Thickness	Jackets	Trousers	Shoes	Gloves	Under-wear
Normal	Single	2.5 mm	2.5 mm	4.0 mm	—	2.5 mm
Normal	Double	5.0 mm	5.0 mm	—	—	5.0 mm
Normal	Total	—	—	—	12.0 mm	—
Reinforcements	Single	10.0 mm	10.0 mm	—	—	—
Reinforcements	Double	20.0 mm	20.0 mm	—	—	—

No measurement greater than the thickness measurement standards in the chart may be approved (zero tolerance).

7.5.2.2 Stiffness Measurement Standards

Rifle competition clothing must comply with these stiffness measurement standards:

a) If the measuring cylinder is depressed at least 3.0 mm, the material is acceptable;

b) If a measurement below 3.0 mm is displayed, the material is too stiff. No measurement below the minimum measurement of 3.0 mm may be approved; and

c) Every part of the jacket or trousers must be capable of being measured with the 60 mm measuring cylinder. If a part is too small for normal testing (no flat area 60 mm or larger), measuring must be done over the seams.

7.5.2.3 Shoe Sole Flexibility Standard

The soles of athletes' shoes must bend at least 22.5 degrees when a force of 15 Newton-Meters is applied to the heel area while the boot or shoe is clamped in the testing device (See Rule 6.5.3).

7.5.3 Shooting Shoes

Normal street type or light athletic shoes are permitted in all positions. Special shooting shoes not exceeding the following specifications may be worn only in 10m and 50m and 300m 3 Positions events. Special shooting shoes must not be worn in Rifle Prone events:

EDITION 2017 | Second Print 01/2018
Copyright: ISSF

7.5.3.1 The material of the upper part (above the line of the sole) must be of soft, flexible, pliable material, not thicker than 4 mm, including all linings, when measured on any flat surfaces such as point D in the **Shooting Shoe Measurements Table** (7.5.3.6).

7.5.3.2 The shoe sole must be constructed of the same material and composition throughout its length and breadth and the sole must be flexible in the entire forward part of the foot. Athletes may use removeable inner soles or inserts in their shoes, but any inserts must also be flexible in the forward part of the foot.

7.5.3.3 To demonstrate that soles are flexible, athletes must walk normally (heel-toe) at all times while on the FOP. A warning will be given for the first offense, a two-point penalty and disqualification will be given for subsequent violations.

7.5.3.4 The height of the shoe from the floor to the highest point (Dimension C, **Shooting Shoe Measurements Table**) must not exceed two thirds (2/3) of the length.

7.5.3.5 If an athlete wears shoes, they must be a matched pair externally.

7.5.3.6 Shooting Shoe Measurements Table

Athletes shoes must not exceed the maximum dimensions shown in the drawing and chart:

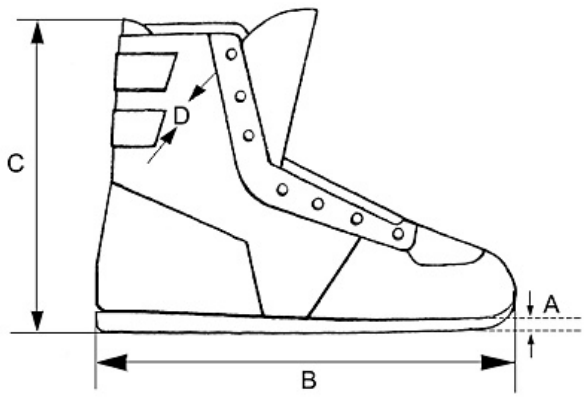

A.	Maximum thickness of sole at the toe: 10 mm.
B.	Overall length of shoe: According to size of wearer's foot.
C.	Maximum height of shoe: Not to exceed two-thirds (2/3) length of B.
D.	Upper part of shoe material maximum thickness 4 mm.
The shoe sole must follow the external curvature of the shoe and may not extend more than 5.0 mm beyond the external dimensions of the shoe at any point. Toes or heels may not be cut square or flat.	

Copyright: ISSF

7.5.4 Shooting Jacket

7.5.4.1 The body and sleeves of the jacket, including the lining, must not exceed 2.5 mm in single thickness and 5.0 mm in double thickness at any point where flat surfaces may be measured. The jacket must not be longer than the bottom of the balled fist (see **Shooting Jacket Measurements**, 7.5.4.9).

7.5.4.2 Closure of the jacket must be only by non-adjustable means e.g. buttons or zippers. The jacket must not overlap more than 100 mm at the closure (see Jacket Table). The jacket must hang loosely on the wearer. To determine this, the jacket must be capable of being overlapped beyond the normal closure by at least 70 mm, measured from the center of the button to the outside edge of the button hole. The measurement will be taken with the arms at the sides. A measurement must be made with an-overlap gauge with a tension of 6.0 kg to 8.0 kg. The area surrounding the button hole is limited to a maximum of 12 mm, and this area may exceed the permitted 2.5 mm thickness.

7.5.4.3 All straps, laces, bindings, seams, stitching or devices which may be construed as artificial support are prohibited. However it is permitted to have one (1) zipper or not more than two (2) straps to take up loose material in the area of the shoulder pad (see **Shooting Jacket Measurements,** 7.5.4.9). No other zipper or other closing or tightening device is permitted other than those specified in these Rules and Diagrams.

7.5.4.4 The construction of the back panel may include more than one (1) piece of material provided this construction does not stiffen or reduce the flexibility of the jacket. All parts of the back panel must comply with the thickness maximum of 2.5 mm and the stiffness minimum of 3.0 mm.

7.5.4.5 The construction of the side panel may not place any seam or seams under the elbow of the support arm in the standing position within a seam-free zone that extends 70 mm above the tip of the elbow and 20 mm below the tip of the elbow. This must be checked with the athlete wearing the jacket fully closed and while holding the rifle in the standing position.

7.5.4.6 The athlete must be capable of fully extending both arms (straighten sleeves) while wearing the buttoned jacket. In the prone and kneeling positions, the sleeve of the shooting jacket must not extend beyond the wrist of the arm on which the sling is attached. The sleeve must not be placed between the hand or glove and the fore-end of the stock when the athlete is in the shooting position.

7.5.4.7 No Velcro, sticky substance, liquid, or spray may be applied to the outside or inside of the jacket, pads or shoes and/or floor or equipment. Roughening the material of the jacket is permitted. Violations will be penalized according to the Rules.

EDITION 2017 | Second Print 01/2018
Copyright: ISSF

7.5.4.8 Shooting jackets may have reinforcement patches added only to their outside surfaces subject to the following limitations:

a) Maximum thickness, including jacket material and all linings: 10 mm single thickness or 20 mm when measured as a double thickness;

b) Reinforcement may be added on both elbows but must not extend to more than half (1/2) of the circumference of the sleeve. On the arm which holds the sling, the reinforcement may extend from the upper arm to a point 100 mm from the end of the sleeve. The reinforcement on the opposite arm may have a maximum length of 300 mm;

c) Only one (1) hook, loop, button or similar device may be fastened to the outside of the sleeve or shoulder seam on the sling arm to prevent the sling from sliding;

d) Reinforcement on the shoulder where the butt-plate rests must not be longer than 300 mm in the longest dimension (see Rule 7.5.4.9);

e) All inside pockets are prohibited; and

f) One (1) external pocket is permitted, located on the right front side (left front side for left hand athletes) of the jacket. The maximum size of the pocket is 250 mm high from the lower edge of the jacket and 200 mm wide.

Copyright: ISSF

7.5.4.9 Shooting Jacket Measurements

Shooting jackets must comply with the specifications shown in the drawing:

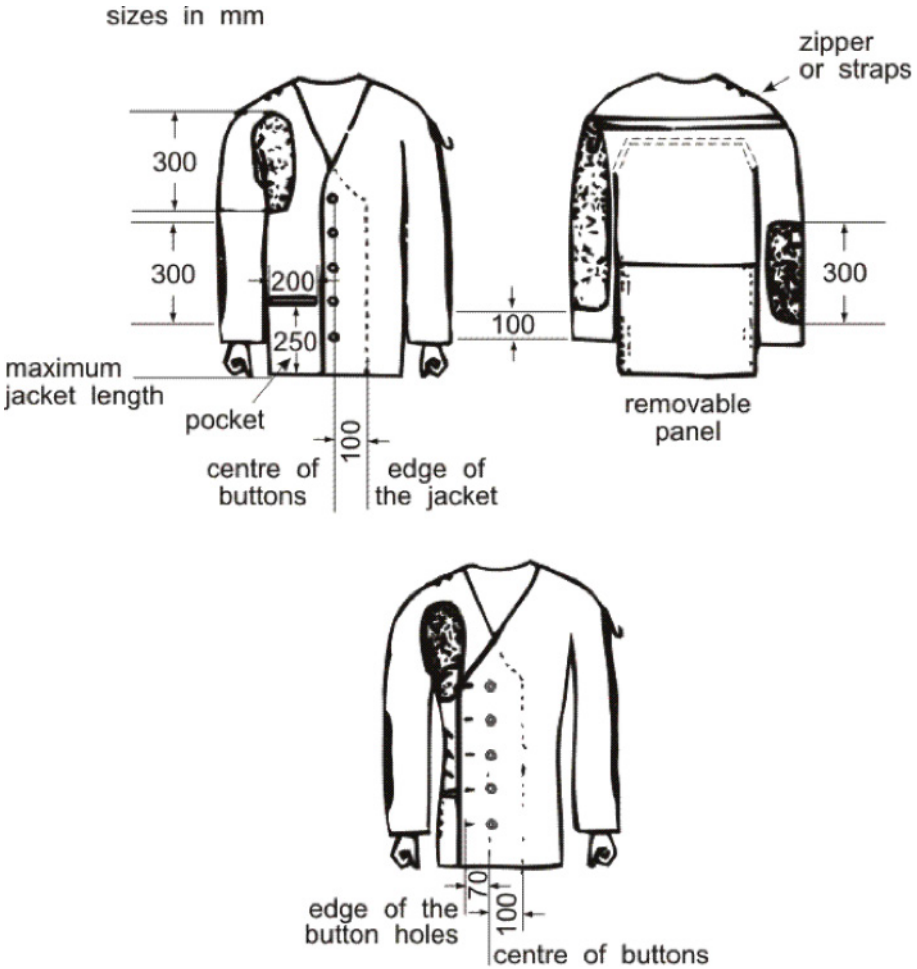

EDITION 2017 | Second Print 01/2018
Copyright: ISSF

7.5.5 Shooting Trousers

7.5.5.1 The trousers, including the lining, must not exceed 2.5 mm in single thickness and 5mm in double thickness at any point where flat surface may be measured. The top of the trousers must not fit or be worn higher on the body than 50 mm above the crest of the hipbone. All pockets are prohibited. All drawstrings, zippers or fasteners to tighten the trousers around the legs or hips are prohibited. To support the trousers only a normal waist belt not more than 40 mm wide and 3 mm thick or braces (suspenders) may be worn. If a belt is worn in the standing position, the buckle or fastening must not be used to support the left arm or elbow. The belt must not be doubled, tripled etc. under the left arm or elbow. If the trousers have a waistband, it may not be more than 70 mm wide. If the thickness of the waistband exceeds 2.5 mm, a waist belt is not permitted. If a waist belt is not worn, the absolute maximum thickness of the waistband is 3.5 mm. There can be a maximum of seven (7) belt loops, not more than 20mm in width, with at least 80mm between belt loops. The trousers may be closed by one (1) hook and up to five (5) eyes, or up to five (5) adjustable snap fasteners, or similar closure or Velcro that must not be multilayered. Only one (1) type of closure is permitted. A Velcro closure combined with any other closure is prohibited. The trousers must be loose around the legs. If special shooting trousers are not worn, ordinary trousers may be worn providing they do not give artificial support to any part of the body.

7.5.5.2 Zippers, buttons, Velcro or similar non-adjustable fasteners or closures, may be used in the trousers only in the following places:

a) One type of fastener or closure in the front to open and close the trouser fly. The fly must not be lower than the level of the crotch;

b) Any holes that cannot be closed are permitted; and

c) Only one (1) other fastener is permitted in each trouser leg. The opening (fastener) must not start closer than 70 mm from the top edge of the trousers. It may, however, extend to the bottom of the trouser leg (see Jacket and Trousers Table). One (1) fastener is permitted either in the front of the upper leg or the back of the leg, but not in both places in one (1) leg.

7.5.5.3 Reinforcements may be added to both knees of the trousers. Knee reinforcements may have a maximum length of 300 mm and must not be wider than half the circumference of the trousers leg. The thickness of reinforcement including the trousers material and any linings must not exceed 10 mm in single thickness (20 mm double thickness).

7.5.5.4 Shooting trousers must not be worn in the Rifle Prone events, but they may be worn in the prone stages of Rifle 3-Position events.

Copyright: ISSF

7.5.5.5 Shooting Trousers Measurements

Shooting Trousers must comply with the specifications shown in the drawing:

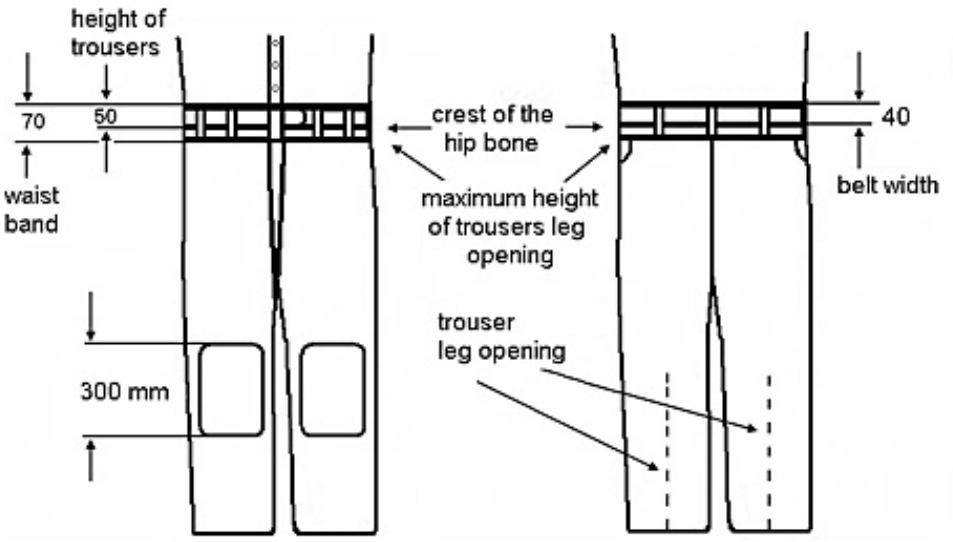

7.5.6 Shooting Gloves

7.5.6.1 The total thickness must not exceed 12 mm when measuring front and back materials together at any point other than on seams and joints.

7.5.6.2 The glove must not extend more than 50 mm beyond the wrist measured from the center of the wrist knuckle (see drawing). Any strap or other closure device at the wrist is prohibited. However, a portion of the wrist may be elasticated to enable the glove to be put on, but it must leave the glove loose around the wrist.

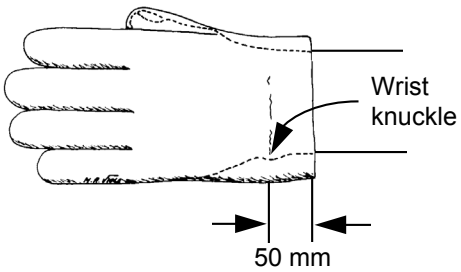

7.5.7 Underclothing

7.5.7.1 Clothing worn under the shooting jacket must not be thicker than 2.5 mm single thickness or 5 mm double thickness. The same applies to all clothing worn under the trousers. Jeans or other ordinary trousers cannot be worn under shooting trousers.

EDITION 2017 | Second Print 01/2018
Copyright: ISSF

7.5.7.2 Only normal personal undergarments and/or training clothing that does not immobilize or unduly reduce the movement of the athlete's legs, body or arms may be worn under the shooting jacket and/or trousers. Any other undergarments are prohibited.

7.5.8 Equipment and Accessories

7.5.8.1 Spotting Telescopes

The use of telescopes not attached to the rifle to locate shots and judge wind is permitted for 50m and 300m events only.

7.5.8.2 Slings

Maximum sling width is 40 mm. The sling must be worn only on the upper part of the left arm and from there be connected to the fore-end of the rifle stock. Slings may be attached to the fore-end of the rifle at a single point only. The sling must pass along one side of the hand or wrist only. No part of the rifle may touch the sling or any of its attachments except at the sling swivel and hand stop.

7.5.8.3 Rifle Rests

The use of a rifle rest for resting the rifle between shots is permitted providing that no part of the stand is higher than the athlete's shoulders when holding the rifle in a standing shooting position. A stand for resting the rifle must not be placed in front of the shooting table or bench in the standing position. Care must be exercised that while resting the rifle, it does not intrude on the athlete on either side. For safety while the rifle is on the rifle rest, it must be held by the athlete.

7.5.8.4 Shooting Box or Bag

The shooting box or bag must not be placed forward of the athlete's forward shoulder on the firing line, except that in the standing position a shooting box or bag, table, or stand may be used as a rifle rest between shots. The shooting box or bag, table or stand must not be of such size or construction as to interfere with athletes on adjacent points or to constitute a wind break.

7.5.8.5 Kneeling Roll

Only one (1) cylindrically shaped roll is allowed for shooting in the kneeling position. The dimensions are a maximum of 25 cm long and 18 cm in diameter. It must be made of soft and flexible material. Binding or other devices to shape the roll are not permitted.

7.5.8.6 Bipod

Bipods may be used to support the rifle before and after shooting or during position changes, but bipods, whether fixed or folding, must be removed from the rifle during all MATCH firing times.

Copyright: ISSF

7.5.8.7 Kneeling Heel Pad

A separate piece of flexible, compressible material with maximum dimensions of 20 cm x 20 cm may be placed on the heel in the kneeling position. The kneeling heel pad may be no thicker than 10 mm when compressed with the measuring device used to measure Rifle clothing thickness.

7.5.8.8 Visor or Cap

A cap or visor may be worn, but it must not touch or rest on the rear sight (must be visibly free of the sight) while the athlete is shooting. The cap or visor may extend forward of the athlete's forehead no more than 80 mm and may not be worn in a way that makes it a side blinder.

EDITION 2017 | Second Print 01/2018
Copyright: ISSF

7.6 SHOOTING EVENT PROCEDURES AND COMPETITION RULES

7.6.1 Shooting Positions

7.6.1.1 Kneeling

a) The athlete may touch the firing point surface with the toe of the right foot, the right knee and the left foot;

b) The rifle may be held with both hands and the right shoulder;

c) The cheek may be placed against the rifle stock;

d) The left elbow must be supported on the left knee;

e) The point of the elbow must not be more than 100 mm over or 150 mm behind the point of the knee;

f) The rifle may be supported by the sling but the fore-end behind the left hand must not touch the shooting jacket;

g) No part of the rifle may touch the sling or its attachments;

h) The rifle must not touch or rest against any other point or object;

i) If the kneeling roll is placed under the right foot or ankle, the foot must not be turned at an angle of more than 45 degrees;

j) If the kneeling roll is not used, the foot may be placed at any angle. This may include placing the side of the foot and the lower leg in contact with the surface of the firing point;

k) No portion of the upper leg or buttocks may touch the surface of the firing point or shooting mat at any point;

l) If the athlete uses the shooting mat he may kneel completely on the shooting mat or may have one (1) or two (2) of three (3) points of contact (toe, knee, foot) on the mat. Other articles or padding may not be placed under the right knee;

m) Only the trousers and underclothing may be worn between the athlete's seat and heel, except that a kneeling heel pad may be used. The jacket or other articles must not be placed between these two (2) points; and

n) The right hand may not touch the left hand, left arm or the left side of the shooting jacket or sling.

Copyright: ISSF

7.6.1.2 Prone

a) The athlete may lie on the bare surface of the firing point or on the shooting mat;

b) He may also use the mat by resting his elbows on it.

c) The body must be extended on the firing point with the head toward the target;

d) The rifle may be supported by both hands and one shoulder only;

e) The cheek may be placed against the rifle stock.

f) The rifle may be supported by the sling, but the fore-end behind the left hand must not touch the shooting jacket;

g) No part of the rifle may touch the sling or its attachments;

h) The rifle must not touch, or rest against, any other point or object;

i) Both forearms and sleeves of the shooting jacket forward of the elbow must be visibly raised from the surface of the firing point;

j) The athlete's sling (left) forearm must form an angle not less than 30 degrees from the horizontal, measured from the axis of the forearm;

k) The right hand and/or arm may not touch the left arm, shooting jacket or sling; and

l) Shooting trousers must not be worn in the Rifle Prone events.

EDITION 2017 | Second Print 01/2018
Copyright: ISSF

7.6.1.3 Standing

a) The athlete must stand free, without any artificial or other support, with both feet on the firing point surface or on the shooting mat;

b) The rifle may be held with both hands and the shoulder or the upper arm near the shoulder and the part of the chest immediately adjacent to the right shoulder;

c) The cheek may be placed against the rifle stock;

d) The rifle must not touch the jacket or chest beyond the area of the right shoulder;

e) The left upper arm and elbow may be supported on the chest or on the hip. If a belt is worn the buckle or fastening must not be used to support the left arm or elbow;

f) The rifle must not touch or rest against any other point or object;

g) A palm rest may be used but not in 300m Standard Rifle or 10m Air Rifle events;

h) A hand stop/sling swivel is not allowed in this position for 300m Standard Rifle and 10m Air Rifle;

i) In this position, the use of the sling is prohibited; and

j) The right hand may not touch the left hand, left arm or the left side of the shooting jacket.

7.7 RIFLE EVENTS

See ISSF RECOGNIZED SHOOTING EVENTS on pages 213-215 and Rule 7.7.4, RIFLE EVENT TABLE.

7.7.1 **50m and 300m 3 Positions events** must be fired in order: **Kneeling – Prone – Standing.**

7.7.2 A combined 15-minute Preparation and Sighting Time must be provided before MATCH firing starts (Rule 6.11.1.1).

Copyright: ISSF

7.7.3 In 3-Position events, after athletes complete the kneeling and prone positions, changing from MATCH to Sighting and back to MATCH is the responsibility of the athlete. Athletes may fire unlimited Sighting shots before starting MATCH firing shots in the prone and standing positions. No additional time is allowed for these Sighting shots. If an athlete inadvertently fails to switch from MATCH to Sighting after changing positions, any shots recorded as extra shots in the previous position must be nullified and the target must be reset to Sighting.

7.7.4 RIFLE EVENTS QUALIFICATION TABLE

Event	Men/ Women	No. of Shots	Number of Shots Per MATCH Target (paper)	Number of Sighting Targets (paper)	Time: Pit Operated or Target Carriers (when paper targets are used)	Time: Electronic Targets
10m Air Rifle	Men or Women	60	1	4	1 hour, 30 minutes	1 hour,15 minutes
10m Mixed Team	Men & Women	2x40	1	4	1 hour	50 Minutes
50m Rifle 3 Positions	Men or Women	120	1	4 for each position	3 hours, 15 minutes	2 hours, 45 minutes
50m Rifle Prone	Men or Women	60	1	4	1 hour	50 minutes
300m Rifle 3 Positions	Men or Women	120	10	1 for each position	3 hours, 30 minutes	3 hours
300m Rifle Prone	Men or Women	60	10	1	1 hour, 15 minutes	1 hour
300m Standard Rifle 3 Positions	Men	60	10	1 for each position	2 hours, 15 minutes	2 hours
Note: The combined Preparation and Sighting Time of 15 minutes must start before the published start time of the event.						

EDITION 2017 | Second Print 01/2018
Copyright: ISSF

7.7.5 RIFLE SPECIFICATION TABLE

Event	Maximum weight	Trigger	Maximum Length of the barrel/system	Ammunition	Thumb hole, thumb rest, palm rest, heel rest, spirit level
10m Air Rifle	5.5 kg (Men/Women)	No set trigger	850 mm (system)	4,5 mm (.177”)	No
50m Rifle 3 Positions and Prone	8.0 kg (Men/ Women)	No restriction	No restriction	5.6 mm (.22”) Long Rifle	Yes – palm rest only standing
300m Rifle 3 Positions and Prone	8.0 kg (Men/ Women)	No restriction	No restriction	Maximum 8 mm	Yes – palm rest only standing
300m Standard Rifle 3 Positions	5.5 kg (Men)	No set trigger Minimum trigger pull: 1500g	762 mm (barrel)	Maximum 8 mm	No
Note: The rifle must be weighed with all accessories, including palm rest or hand stop (if used).					

Copyright: ISSF

7.8 INDEX

10m Air Rifle	7.4.2 / 7.4.4
3 Positions – Change Targets after a Position	7.7.3
3 Positions – Combined Preparation & Sighting Time	7.7.2
3 Positions – Firing Order	7.7.1
300m Rifle	7.4.5.4
300m Standard Rifle	7.4.2 / 7.4.3
50m Rifle	7.4.5
Accessories and Equipment	7.5.8
Aiming left – Shooting right / Aiming right – Shooting left	7.4.1.6 e
Ammunition	7.4.6
Application of Rules for all Rifle Events	7.1.1
Barrel – Length – 300m Standard Rifle	7.4.3 c
Barrels	7.4.1.5
Bipod	7.5.8.6
Blinder – On the Rear Sight	7.4.1.6 e
Butt Plate – 50m Rifle	7.4.5.1
Butt Plate – Offset on 300m Standard Rifles / 10m Air Rifles	7.4.2.1
Caps or Visor	7.5.8.8
Change a Rifle after disabled	7.4.1.2
Change or more than one Part of a Rifle per Event	7.4.1.2
Characteristics of Shooting Clothing	7.5.1.3 / 7.5.1.4
Check after Competition / Qualification (Rule 6.7.9)	7.5.1.5
Clothing Regulations	7.5
Clothing under the Jacket and Trousers	7.5.7
Clothing Measurement Standards	7.5.2
Clothing Stiffness Measurement Standards	7.5.2.2
Clothing Thickness Standards Table	7.5.2.1
Compensators	7.4.1.5
Corrective Lenses	7.4.1.6 c
Device inside Barrels / Tubes	7.4.1.5
Disabled Rifle	7.4.1.2
Electronic Triggers	7.4.1.7
Equipment and Accessories	7.5.8
General Rifle	7.1
Hand Heel Rest – 300m Standard Rifle / 10m Air Rifle	7.4.2.2

EDITION 2017 | Second Print 01/2018
Copyright: ISSF

Hook – 50m Rifle	7.4.5.1
Increased Grip Material – 300m Standard Rifle / 10m Air Rifle	7.4.2.6
Kneeling	7.6.1.1
Kneeling Heel Pad	7.5.8.7
Kneeling Roll	7.5.8.5
Knowledge of the Rules	7.1.2
Left-handed Athlete – Right-handed Athlete	7.1.3
Length of Barrel – 300m Standard Rifle	7.4.3 c
Length of Rifle System – 10m Air Rifle	7.4.4 a
Lenses	7.4.1.6
Light Filters	7.4.1.6
Material for Shooting Jackets, Shooting Trousers, Shooting Gloves	7.5.1.1
Men's Events / Women's Events	7.1.4
Mirage Band – 300m Rifle	7.4.5.4
Movement or Oscillation Reduction Systems	7.4.1.3
Muzzle Brakes	7.4.1.5
Number of Shooting Jackets and Shooting Trousers	7.5.1.2
One Rifle per Event	7.4.1.2
Palm rest – 300m Standard Rifle / 10m Air Rifle	7.4.2.2
Palm rest – 50m Rifle	7.4.5.2
Perforation of Barrels / Tubes	7.4.1.5
Pistol Grip Extension – 300m Standard Rifle / 10m Air Rifle	7.4.2.3
Pistol Grips	7.4.1.4
Pistol Grips – 50m Rifle	7.4.5.3
Positions	7.6.1
Post-Competition Testing (Rule 6.7.9)	7.5.1.2 / 7.5.1.5
Preparation and Sighting Time (Rule 6.11.1.1)	7.7.2
Program Order	7.7.1
Prone	7.6.1.2
Range and Target Standards	7.3
Reinforcements – Shooting Jacket	7.5.4.8
Reinforcements – Shooting Trousers	7.5.5.3
Reinforcements – Clothing Thickness Table	7.5.2.1
Rests – Rifle Rests	7.5.8.3
Rifle Events - See the Rifle Events Qualification Table 7.7.4	7.7
Rifle Measurements – 10m Air Rifle	7.4.4
Rifle Measurements Table – 300m Standard Rifle / 10m Air Rifle	7.4.4.2
Rifle Specification Table	7.7.5

Copyright: ISSF

Rifles and Ammunition	7.4
Right-handed Athlete – Left-handed Athlete	7.1.3
Safety	7.2
Shooting Box / Shooting Bag	7.5.8.4
Shooting Events Procedures and Competition Rules	7.6
Shooting Gloves	7.5.6
Shooting Gloves – Closure	7.5.6.2
Shooting Gloves – Thickness	7.5.6.1
Shooting Jacket	7.5.4
Shooting Jacket – Artificial Support; Straps, Laces, Stitching, etc.	7.5.4.3
Shooting Jacket – Body, Sleeves, Length	7.5.4.1
Shooting Jacket – Both Arms straighten Sleeves	7.5.4.6
Shooting Jacket – Closure: Non-adjustable	7.5.4.2
Shooting Jacket – Construction of the Back Panel	7.5.4.4
Shooting Jacket – Drawing & Measurements	7.5.4.9
Shooting Jacket – Fastening of Sling	7.5.4.8 c
Shooting Jacket – Loose Material in the Area of the Shoulder	7.5.4.3
Shooting Jacket – Overlapping, Hanging loosely	7.5.4.2
Shooting Jacket – Pocket	7.5.4.8 f
Shooting Jacket – Position of the Sleeve	7.5.4.6
Shooting Jacket – Reinforcements	7.5.4.8
Shooting Jacket – Reinforcements: Butt Plate rest on the Shoulder	7.5.4.8 d
Shooting Jacket – Reinforcements: Elbows	7.5.4.8 b
Shooting Jacket – Reinforcements: Maximum Thickness	7.5.4.8 a
Shooting Jacket – Roughening	7.5.4.7
Shooting Jacket – Side Panel with horizontal Seams	7.5.4.5
Shooting Jacket – Size of Pocket	7.5.4.8 f
Shooting Jacket – Straighten Sleeves	7.5.4.6
Shooting Jacket – Use of sticky Substance, Liquid, etc…	7.5.4.7
Shooting left – Aiming right / Shooting right – Aiming left	7.4.1.6 e
Shooting Positions	7.6.1
Shooting Shoes	7.5.3
Shooting Shoes – Flexibility of the Soles	7.5.2.3
Shooting Shoes – Height	7.5.3.4
Shooting Shoes – Inner Soles	7.5.3.2
Shooting Shoes – Matching Pair	7.5.3.5
Shooting Shoes – Material Sole	7.5.3.2
Shooting Shoes – Material upper Part	7.5.3.1

EDITION 2017 | Second Print 01/2018
Copyright: ISSF

Shooting Shoes – Measurements Table	7.5.3.6
Shooting Shoes – Walking Test	7.5.3.3
Shooting Trousers	7.5.5
Shooting Trousers – Braces (Suspenders)	7.5.5.1
Shooting Trousers – Closure Devices	7.5.5.1
Shooting Trousers – Closure Devices: Trousers Fly	7.5.5.2
Shooting Trousers – Closure Devices: Trousers Leg	7.5.5.2 c
Shooting Trousers – Drawing & Measurements	7.5.5.5
Shooting Trousers – Draw-strings, Zippers, Fasteners	7.5.5.1 / 7.5.5.2
Shooting Trousers – Loose around the Legs	7.5.5.1
Shooting Trousers – Reinforcements	7.5.5.3
Shooting Trousers – Thickness	7.5.5.1
Shooting Trousers – Top of Trousers	7.5.5.1
Shooting Trousers – Waist Band: Wide, Closure Devices	7.5.5.1
Shooting Trousers – Waist Belt	7.5.5.1
Shorts	7.5.1.3
Sights	7.4.1.6
Sights – Lenses, Lenses System, Light Filters	7.4.1.6
Slings	7.5.8.2
Specification Table - Rifle	7.7.5
Spirit Level – 300m Standard Rifle / 10m Air Rifle	7.4.2.2
Spotting Telescopes	7.5.8.1
Standards for 300m Standard Rifle / 10m Air Rifle	7.4.2
Standards for all Rifles	7.4.1
Standing	7.6.1.3
Stiffness of Clothing	7.5.2.2
Telescopes	7.5.8.1
Thickness of clothing	7.5.2.1
Thickness – Table	7.5.2.1
Thumb Hole – 300m Standard Rifle / 10m Air Rifle	7.4.2.2
Thumb Rest – 300m Standard Rifle / 10m Air Rifle	7.4.2.2
Trigger Pull – 300m Standard Rifle	7.4.3 a
Underclothing	7.5.7
Visor or Caps	7.5.8.8
Walking Normally	7.5.3.3
Weights – 300m Standard Rifle / 10m Air Rifle	7.4.2.7
Women's Events / Men’s Events	7.1.4

Copyright: ISSF

International Shooting Sport Federation
Internationaler Schiess-Sportverband e.V.
Fédération Internationale de Tir Sportif
Federación Internacional de Tiro Deportivo

8. PISTOL RULES

FOR
10m Air Pistol
25m Pistol
25m Rapid Fire Pistol
25m Center Fire Pistol
25m Standard Pistol
50m Pistol

EDITION 2017 | Second Print 01/2018
Copyright: ISSF

Chapters

8.1	**GENERAL**	***410***
8.2	**SAFETY**	***410***
8.3	**RANGE AND TARGET STANDARDS**	***410***
8.4	**EQUIPMENT AND AMMUNITION**	***410***
8.5	**ATHLETES SHOES**	***415***
8.6	**SHOOTING ACCESSORIES**	***416***
8.7	**SHOOTING EVENT PROCEDURES AND COMPETITION RULES**	***416***
8.8	**INTERRUPTIONS AND IRREGULARITIES**	***426***
8.9	**MALFUNCTIONS IN 25m EVENTS**	***430***
8.10	**FAILURE OF EST OR PAPER TARGET SYSTEMS**	***434***
8.11	**PISTOL EVENT QUALIFICATION TABLE**	***436***
8.12	**PISTOL SPECIFICATION TABLE**	***437***
8.13	**PISTOL CONFIGURATION DRAWING (10M AND 25M PISTOLS)**	***438***
8.14	**INDEX**	***439***

NOTE:

Where figures and tables contain specific information, these have the same authority as the numbered rules.

Copyright: ISSF

8.1 GENERAL

8.1.1 These Rules are part of the ISSF Technical Rules and apply to all Pistol events.

8.1.2 All athletes, team leaders and officials must be familiar with the ISSF Rules and must ensure that these Rules are enforced. It is the responsibility of each athlete to comply with the Rules.

8.1.3 When a Rule refers to right-handed athletes, the reverse of that Rule refers to left-handed athletes.

8.1.4 Unless a Rule applies specifically to a men's or a women's event, it must apply uniformly to both men's and women's events.

8.2 SAFETY

SAFETY IS OF PARAMOUNT IMPORTANCE

ISSF Safety Rules are found in the General Technical Rules, Rule 6.2.

8.3 RANGE AND TARGET STANDARDS

Target and target standards are found in the General Technical Rules, Rule 6.3. Requirements for ranges and other facilities are found in the General Technical Rules, Rule 6.4.

8.4 EQUIPMENT AND AMMUNITION

8.4.1 Standards for All Pistols

8.4.1.1 **Grips**. For dimensions and details of grips see the **PISTOL SPECIFICATION TABLE** (8.12) and the **PISTOL CONFIGURATION DRAWINGS** (8.13).

a) Neither the grip nor any part of the pistol may be extended or constructed in any way that would allow it to touch beyond the hand. The wrist must remain visibly free when the pistol is held in the normal firing position. Bracelets, wristwatches, wristbands, or similar items are prohibited on the hand and arm that holds the pistol; and

b) Adjustable grips are permitted providing that when they are adjusted for the athlete's hand they conform to these Rules. Grip adjustments are subject to random Equipment Control checks to ensure that they conform with these Rules.

8.4.1.2 **Barrels**: see the **PISTOL SPECIFICATION TABLE** (8.12).

EDITION 2017 | Second Print 01/2018
Copyright: ISSF

8.4.1.3 Sights

a) Only open sights are allowed. Sights using fiber optic, light enhancing or reflecting color surfaces are prohibited. Optical, mirror, telescope, laser-beam, electronically projected dot sights etc. are prohibited;

b) Any aiming device programmed to activate the firing mechanism is prohibited;

c) No protective covering is permitted on front or rear open sights;

d) 10m and 25m Pistols must fit within specified measuring boxes with sights mounted on the pistols (see **PISTOL SPECIFICATION TABLE**, Rule 8.12);

e) Correcting lenses and/or filters must not be attached to the pistol; and

f) Corrective lenses or eyeglasses and/or filters or tinted lenses may be worn by the athlete.

8.4.1.4 **Electronic Triggers** are allowed providing:

a) All components are firmly attached to and contained within the frame or grip of the pistol;

b) The trigger is operated by the hand that holds the pistol;

c) All components must be included when the pistol is inspected by Equipment Control; and

d) The pistol with all components installed complies with the rules governing dimensions and weight for that event.

8.4.1.5 **Case Catchers** are allowed providing the pistol complies with these Rules (dimensions and weight) when attached.

8.4.1.6 **Movement or Oscillation Reduction Systems.** Any device, mechanism or system that actively reduces, slows or minimizes pistol oscillations or movements before the shot is released is prohibited.

Copyright: ISSF

8.4.2 Measuring Trigger Pull Weight

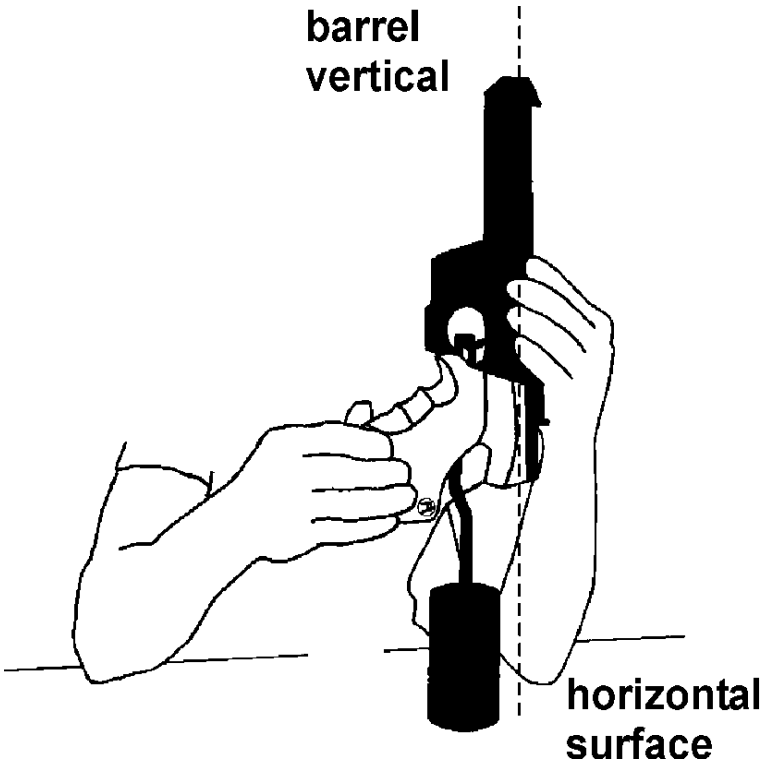

The weight of the trigger pull must be measured with the test weight suspended near the middle of the trigger (see illustrations) and the barrel held vertically. The weight must be placed on a horizontal surface and lifted clear of the surface. The tests must be conducted by Equipment Control officials. The minimum weight of the trigger pull must be maintained throughout the competition. A maximum of three (3) attempts to lift the weight are allowed. If it does not pass, it may only be resubmitted after adjustment. When testing air or gas actuated pistols, the propellant charge must be activated.

EDITION 2017 | Second Print 01/2018
Copyright: ISSF

8.4.2.1 Testing the weight of the trigger pull must be done according to the diagrams below. A weight with a metal or rubber knife-edge must be used. A roller on the trigger weight is not permitted. A dead weight must be used with no springs or other devices.

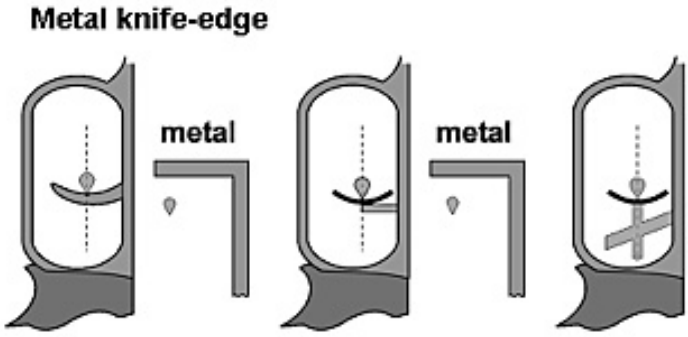

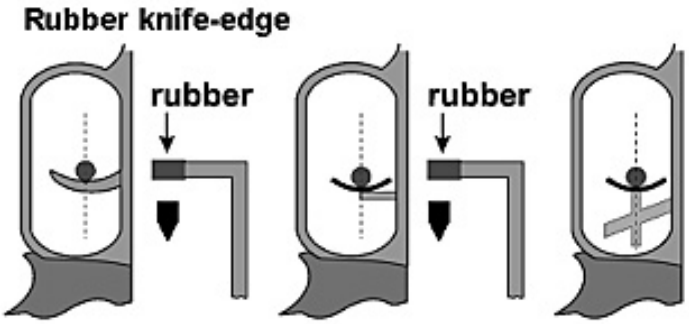

8.4.2.2 The appropriate trigger test weight must also be made available to athletes on the range before and during training and competition, and before Finals, to allow them to recheck the weight of the trigger pull on their pistols.

8.4.2.3 Random Trigger Weight control checks must be conducted immediately after the last series in all Qualification Rounds of 10m events and 25m stages. Checks in Standard Pistol will be made after 60 shots or, if the competition is fired in two stages (30 + 30 shots), checks will be done after each stage. At least one (1) athlete should be selected from each Range Section (or every eight (8) firing positions for Air Pistol) by the drawing of lots by the Equipment Control Jury. Equipment Control Officers must then conduct the tests before pistols are returned to their cases. A maximum of three (3) attempts to lift the weight are allowed. An athlete whose pistol fails this test or a selected athlete who fails to submit his pistol for testing must be disqualified.

Copyright: ISSF

8.4.3 Standards for 25m, 50m and 10m Pistols

8.4.3.1 25m Rimfire and Center Fire Pistols

a) The Athlete must use the same pistol in all stages and series of an event unless it ceases to function;

b) The center-line of the bore must pass above the web (between thumb and forefinger) of the hand holding the pistol in the normal firing position (see **PISTOL CONFIGURATION DRAWING**); and

c) The barrel length is measured as follows (see **PISTOL SPECIFICATION TABLE**).

Semiautomatic	From the muzzle to the breech face (barrel plus chamber).
Revolver	Barrel only (excluding cylinder).

8.4.3.2 25m Rimfire Pistol

Any caliber 5.6 mm (.22”) rimfire pistol, chambered for long rifle cartridges, except a single shot pistol, that conforms to the **PISTOL SPECIFICATION TABLE** may be used.

8.4.3.3 25m Center Fire Pistol

Any center fire pistol or revolver, except a single shot pistol, of caliber 7.62 mm to 9.65 mm (.30” - .38”) that conforms to the **PISTOL SPECIFICATION TABLE** may be used.

8.4.3.4 50m Pistol

a) Any caliber 5.6 mm (.22 cal.) rimfire pistol chambered for long rifle cartridges may be used; and

b) Hand covers for 50m Pistols are permitted, providing they do not cover the wrist.

8.4.3.5 10m Air Pistol

Any 4.5 mm (.177 cal.) compressed air, CO_2 or pneumatic air pistol that conforms to the **PISTOL SPECIFICATION TABLE** and **PISTOL CONFIGURATION DRAWING** may be used.

EDITION 2017 | Second Print 01/2018
Copyright: ISSF

8.4.4 Ammunition

All projectiles used must be made only of lead or similar soft material. Jacketed projectiles are not permitted. The Jury may take samples from the athlete's ammunition for checking.

Pistol	Caliber	Other specifications
10m Air Pistol	4,5 mm (.177")	
25m Center Fire Pistol	7.62 mm – 9.65 mm (.30"-.38")	Highpower or Magnum ammunition is not allowed
50m Pistol	5.6 mm (.22")	Rimfire Long Rifle
25m Rimfire Pistol	5.6 mm (.22")	Rimfire Long Rifle For the Rapid Fire Pistol event: minimum bullet weight 2.53 g = 39 gr; minimum average velocity 250m/sec., measured 3.0 m from the muzzle.

8.4.4.1 Velocity testing will be done with a chronograph (velocity measurement device). The Technical Delegate must confirm the accuracy of the chronograph in accordance with testing procedures developed by the ISSF Technical Committee. A chronograph must be available to athletes on the range.

8.4.4.2 The ammunition of at least one (1) athlete from each relay must be tested. The Equipment Control Jury will supervise the selection of the athletes to be tested and collect the ammunition to be tested before each 30-shot Qualification stage. Athletes should have at least 50 rounds with them for each stage of competition. A Jury Member must take ten (10) cartridges from the ammunition that the athlete is using, place them in a labeled envelope, seal the envelope and hand it to the testing officer. After the stage is completed, the athlete selected must go to the testing station. The testing officer will load a magazine with three (3) cartridges and fire them in that athlete's pistol and record the muzzle velocity of each cartridge. If the average velocity is under 250.0 m/sec, the test must be repeated. If the average velocity of the six (6) shots is less than 250.0 m/sec, the athlete must be disqualified.

8.5 ATHLETES SHOES

8.5.1 Only low-sided shoes that do not cover the ankle bone (below the medial and lateral malleolus) are permitted. The sole must be flexible in the entire forward part of the foot;

8.5.2 Athletes may use removeable inner soles or inserts in their shoes, but any inserts must also be flexible in the forward part of the foot;

Copyright: ISSF

8.5.3 An ISSF approved testing device will be used to check sole flexibility;

8.5.4 To demonstrate that shoe soles are flexible, athletes must walk normally (heel-toe) at all times while on the field of play. A warning will be given for the first offense, a two-point penalty or disqualification will be given for subsequent violations;

8.5.5 **Shoe Sole Flexibility Measurement Device**. The device used to measure shoe sole flexibility must be capable of accurately measuring how many degrees the shoe sole bends while bent with a precise amount of upward pressure; and

8.5.6 **Shoe Sole Flexibility Standard**. The soles of athletes' shoes must bend at least 22.5 degrees when a force of 15 Newton-Meters is applied to the heel area while the shoe is clamped in the testing device.

8.6 SHOOTING ACCESSORIES

8.6.1 Spotting Telescopes

The use of telescopes not attached to the pistol to locate shots or judge the wind is permitted in 25m and 50m events only.

8.6.2 Pistol Transport Boxes

Athletes may use pistol transport boxes to take pistols and equipment to the shooting ranges. During Finals, pistol transport boxes or equipment bags must not remain on the FOP.

8.6.3 Pistol Support Stands

Athletes may place pistol support stands or boxes on the bench or table to rest their pistols between shots. The total height of the bench or table with a support stand or box on it may not exceed 1.00 m (see Rule 6.4.11.10, maximum bench height is 1.00 m). During Elimination or Qualification competitions, a pistol transport box (Rule 8.6.2) may be used as a pistol support stand, provided the total height of the bench or table plus the box does not exceed 1.00 m. During Finals, a pistol transport box may not be used as a pistol support stand.

8.7 SHOOTING EVENT PROCEDURES AND COMPETITION RULES

8.7.1 Firing Position

The athlete must stand free, without any artificial or other support, with both feet and/or shoes completely within the firing point. The pistol must be held and fired with one (1) hand only. The wrist must be visibly free of support.

EDITION 2017 | Second Print 01/2018
Copyright: ISSF

8.7.2 Ready Position

In the 25m Rapid Fire Pistol event, 25m Pistol and 25m Center Fire Pistol Rapid Fire Stages and 25m Standard Pistol 20 sec. and 10 sec. series, shooting must start from the READY position (see drawing). In the READY position, the athlete's arm must point downward at an angle of not greater than 45 degrees from the vertical. The arm with the pistol must not be pointed at the ground within the forward edge of the firing point. After the series begins, the pistol may not rest on the bench or shooting table. The arm must remain in this position while waiting either for the appearance of the target or, when EST are used, for the green light(s) to come on.

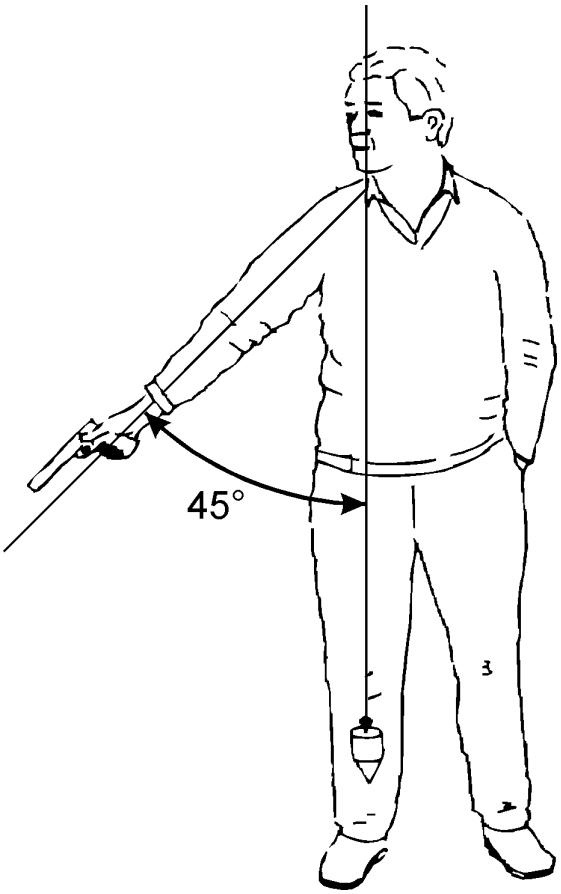

Copyright: ISSF

8.7.3 Ready Position Violations

A READY position violation occurs when an athlete in the 25m Rapid Fire Pistol event or in the Rapid Fire Stage of the 25m Pistol or 25m Center Fire Pistol event, or in the 20 second or 10 second stages of the 25m Standard Pistol event:

a) Raises his arm too soon and this movement becomes part of the arm lift (continuous motion);

b) Does not lower his arm sufficiently; or

c) Raises his arm above 45 degrees before the light changes or the targets start to turn.

8.7.4 Procedures for Ready Position Violations

WHEN A READY POSITION VIOLATION OCCURS;

a) The athlete must be warned by a Jury Member and the series must be recorded and repeated;

b) When the series is repeated in the 25m Rapid Fire Pistol event, the athlete must be credited with the lowest value hit on each target. In all other 25m events, the athlete must be credited with the five (5) lowest value hits in the two (2) series (or three (3) series should a malfunction be involved);

c) If the fault is repeated in the same stage of 30 shots in the 25m Rapid Fire Pistol event, or in the Rapid Fire Stage of the 25m Pistol or 25m Center Fire Pistol event, or in the combined 20 second and 10 second stages of the 25m Standard Pistol event, the same procedure must be applied and the athlete must be penalized by a deduction of two (2) points from his score; and

d) If a third violation of this Rule occurs, the athlete must be disqualified.

8.7.5 Pistol Events

See ISSF RECOGNIZED SHOOTING EVENTS on pages 213-215 and Rule 8.11, PISTOL EVENT TABLE.

EDITION 2017 | Second Print 01/2018
Copyright: ISSF

8.7.6 Competition Rules

8.7.6.1 Preparation Time for 25m Events

a) Athletes should report to their Range Section, but must wait to be called to their firing points;

b) Before the Preparation Time starts, and after any preceding relay is finished, the CRO will call the athletes to the line. Only on command, can athletes remove their pistols from their boxes and handle their pistols;

c) Pre-competition checks by the Jury and Range Officers must be completed before the Preparation Time starts;

d) Preparation Time begins with the command **"PREPARATION TIME BEGINS NOW."** During the Preparation Time the targets must be visible, facing the athletes. During the Preparation Time athletes may handle their pistols, dry fire and carry out holding and aiming exercises on the firing line; and

e) **Preparation Time** allowed before the competition starts is as follows:

25m Standard Pistol	5 minutes
25m Precision Stages	5 minutes
25m Rapid Fire Stages or Events	3 minutes

Copyright: ISSF

8.7.6.2 Specific Rules for 25m Events

a) In all 25m events, timing must start at the moment the green lights come on (or the targets begin to face) and stop when the red lights come on (or the targets begin to turn away); when EST are used, the green lights are on for the required time +0.1 sec.;

b) The turning of the targets or the switching of lights may be controlled by a Target Operator who is located behind the firing line. His position must not disturb the athlete, but it must be within the sight and hearing of the Range Officer. The targets may also be operated by the Range Officer by means of a remote control system;

c) **"LOAD."** In all 25m Training or Qualification events, only one (1) magazine or pistol may be loaded with not more than five (5) cartridges on the command **"LOAD."** Nothing else is allowed to be inserted into the magazine or cylinder;

d) If an athlete in Qualification loads his pistol with more cartridges than he is allowed to load (full series or series completion) or he loads more than one (1) magazine on any command **"LOAD"** he must be penalized by the deduction of two (2) points from his score in that same series. If the athlete violates this rule in Training, he must be directed to unload his pistol, insert a safety flag and stop training.

e) An athlete who fires a shot or shots before the command **"LOAD"** must be disqualified; and

f) **"UNLOAD."** In all events, after the series or stage has been completed, the command **"UNLOAD"** must be given. In any case, immediately upon completing a series (unless there is a pistol malfunction), or when ordered, the athlete must unload the pistol.

EDITION 2017 | Second Print 01/2018
Copyright: ISSF

8.7.6.3 Specific Rules for the 25m Rapid Fire Pistol Qualification Event

a) The event is 60 competition shots divided into two (2) stages of 30 shots each. Each stage includes six (6) series of five (5) shots each, two (2) series in eight (8) seconds, two (2) series in six (6) seconds and two (2) series in four (4) seconds. In each series, one (1) shot is fired at each of the five (5) targets within the specified time limit for the series;

b) Before the beginning of each stage, the athlete may fire one (1) Sighting series of five (5) shots in eight (8) seconds;

c) All shooting (Sighting and MATCH firing series) is by command. Both athletes in the same Range Section must fire at the same time, but organizers may have more than one (1) Range Section to fire simultaneously under centralized commands;

d) If a pistol of any of the athletes firing together has a malfunction, the malfunction series must be re-fired by those concerned in the same time stage with the following regular series. The final series of this stage will be fired immediately after all other athletes firing together have completed this time stage. Each Range Section may operate independently;

e) Before the Range Officer gives the command **"LOAD,"** he must call out the series time (i.e. **"eight second series," "six second series,"** etc.), or the series time must be indicated in some manner such as using a numbered sign of sufficient size to be visible to the athlete. When the Range Officer gives the command **"LOAD,"** athletes must prepare themselves for their series within one (1) minute;

f) When one (1) minute has expired, the Range Officer will give the command:

"ATTENTION"	The red lights must be switched on (if paper targets are used, they must be turned to the edge-on position) and the athletes must bring their pistols to the READY position.
	When EST are used, the red lights will be switched on. After a delay of 7 sec. +/- 0.1 sec. the green lights will come on for the required time +0.1 sec. When paper targets are used, the targets will be turned to the edge-on position. After a delay of 7 sec. (+/- 0.1 sec.), the targets will be turned to face the athletes.

g) Before each series, the athlete must lower his arm and adopt the **READY** position;

Copyright: ISSF

h) The green lights come on (if paper targets are used, the targets turn to face the athletes) seven (7) seconds +/- 0.1 sec. after the command **“ATTENTION;”**

i) Pistols may be raised the moment the green lights come on (or the targets begin to face);

j) The athlete should fire five (5) shots during each series;

k) A series is considered as having started after the command **“ATTENTION”;** every shot fired after that must be counted as a MATCH shot;

l) After the firing of each series, there should be a pause of at least one (1) minute before the next command **“LOAD;”** and

m) There should be a minimum of 30 min., or longer if the program permits, between the scheduled start times for relays; the published start time for successive relays should be adequate to allow for these relays to start at the published time.

EDITION 2017 | Second Print 01/2018
Copyright: ISSF

8.7.6.4 Specific Rules for 25m Pistol and 25m Center Fire Pistol

The program for each event is 60 MATCH shots divided into two (2) stages of 30 shots each:

Stage	Number of series and shots	Time limit for each Sighting or MATCH series
Precision Stage	six (6) series of five (5) shots	five (5) minutes
Rapid Fire Stage	six (6) series of five (5) shots	see below

a) Before the beginning of each stage, the athlete may fire one (1) Sighting series of five (5) shots;

b) The Range Officer must give the command **"LOAD" BEFORE EACH SERIES;** after the command **"LOAD,"** the athlete must prepare himself within one (1) minute with the correct number of cartridges;

c) After the command **"UNLOAD"** is given at the end of a sighting or MATCH series, there must be a pause of one (1) minute before the Range Officer gives the command **"LOAD"** to start the next series;

d) Firing will begin on the appropriate command or signal; the commands for stationary targets are „**START**" or the signal of a horn and „**STOP**" or a horn signal; the signals for turning targets are when the targets turn toward or away from the athlete; the signals for EST are the red and green lights;

e) All athletes must complete the Precision Stage before the Rapid Fire Stage may begin;

f) During each series in the Rapid Fire Stage, the target is shown five (5) times for 3.0 sec. -0.0 to +0.2 sec. or, when EST are used, the green lights come on for 3.1 sec. for each shot; the time between each appearance (the edge-on position) or, when EST are used, when the red lights are on, must be seven (7) sec. ± 0.1 second; one (1) shot only will be fired during each appearance of the target; when EST are used, the green light must go off after 3.1 sec., but the target must continue to record a valid shot for an additional 0.2 sec. "after time" in accordance with Rule 6.4.13;

Copyright: ISSF

g) All athletes will fire the Sighting series as well as all MATCH series at the same time and on the same commands:

“FOR THE SIGHTING SERIES – LOAD”	All athletes load within a time of one (1) minute.
“FOR THE FIRST / NEXT COMPETITION SERIES – LOAD”	All athletes load within a time of one (1) minute.
“ATTENTION”	When EST are used, the red lights will be switched on. After a delay of 7 sec. ±0.1 sec. the green lights will come on. When paper targets are used, the targets will be turned to the edge-on position. After a delay of 7 sec. ±0.1 sec., the targets will be turned to face the athletes.

h) Before each shot the athlete must lower his arm and adopt the READY position;

i) The pistol must not rest on the bench, or shooting table, during the series; and

j) A series is considered as having started from the moment the red light is switched on, or the targets turn away from the athlete after the command **“ATTENTION,”** every shot fired after that must be counted as a MATCH shot.

EDITION 2017 | Second Print 01/2018
Copyright: ISSF

8.7.6.5 Specific Rules for the 25m Standard Pistol Event

The event program is 60 MATCH shots divided into 3 stages of 20 shots each. Each stage consists of 4 series of 5 shots:

Stage	Number of series and shots	Time limit for each series
1	four (4) series of five (5) shots	150 sec.
2	four (4) series of five (5) shots	20 sec.
3	four (4) series of five (5) shots	10 sec.

a) Before the beginning of MATCH firing, the athlete may fire one (1) Sighting series of five (5) shots within a time limit of 150 seconds;

b) Before the Range Officer gives the command **"LOAD,"** he must call out the series time (such as 150 sec. series, or 20 sec. series etc.), or the series time must be indicated in some manner such as using a numbered sign of sufficient size to be visible to the athlete;

c) When the Range Officer gives the command **"LOAD,"** the athlete must prepare himself immediately for the series within one (1) minute;

d) When one (1) minute has expired, the Range Officer will give the command:

"ATTENTION"	When EST are used, the red lights will be switched on. After a delay of 7 sec. ±0.1 the green lights will come on. When paper targets are used, the targets will be turned to the edge-on position. After a delay of 7 sec. ±0.1, the targets will be turned to face the athletes.

e) Before each series, except in the 150 sec. series, the athlete must lower his arm and adopt the READY position;

f) A series is considered as having started from the moment the red light is switched on, or the targets turn away from the athlete after the command **"ATTENTION,"** every shot fired after that must be counted as a MATCH shot;

g) After the command **"UNLOAD"** is given at the end of a sighting or MATCH series, there must be a pause of one (1) minute before the Range Officer gives the command **"LOAD"** to start the next series.

Copyright: ISSF

h) When it is necessary to conduct the event in two parts, each part must consist of:

Stage	Number of series and shots	Time limit for each series
1	two (2) series of five (5) shots	150 sec.
2	two (2) series of five (5) shots	20 sec.
3	two (2) series of five (5) shots	10 sec.

i) Before the beginning of each part of the event, the athlete may fire one (1) sighting series of five (5) shots within a time limit of 150 sec.

8.8 INTERRUPTIONS AND IRREGULARITIES

8.8.1 Interruptions in 25m Events and Stages

If shooting is interrupted for safety or technical reasons (without being the fault of the athlete):

a) If the elapsed time is **more than 15 min.**, the Jury must allow one (1) extra sighting series of five (5) shots;

b) In the 25m Rapid Fire Pistol and in the 25m Standard Pistol event, if the series is interrupted it must be annulled and repeated. The repeated series must be recorded and credited to the athlete;

c) In the 25m Pistol and the 25m Center Fire Pistol events, the interrupted series must be completed. The completed series must be recorded and credited to the athlete; and

d) In the Precision Stage the time limit is one (1) minute for every shot to be fired to complete the series.

EDITION 2017 | Second Print 01/2018
Copyright: ISSF

8.8.2 Irregular Shots in 25m Events and Stages

8.8.2.1 Too Many Competition Shots Fired (25m)

If an athlete fires more MATCH shots on a target than the **Pistol Events Qualification Table** (Rule 8.11) specifies, or more than one (1) shot at one (1) appearance of the target in a Rapid Fire Pistol Series, the highest value hit(s) must be disregarded from the score of that target;

a) Two (2) points must also be deducted from the score of that series for each extra shot fired in the series;

b) This penalty is in addition to the penalty of two (2) points that may be imposed when an athlete loads more than the authorized number of cartridges; and

c) Two (2) points must be deducted on every occasion if two (2) shots are fired during a single exposure of the target in the Rapid Fire stages of the 25m Pistol and the 25m Center Fire Pistol events.

8.8.2.2 Too Many Sighting Shots Fired (25m)

If an athlete **fires more Sighting shots** than are provided for in the **Pistol Events Qualification Table** (Rule 8.11, or are approved by the Range Officer or Jury, he must be penalized by the deduction of two (2) points from the first series of his MATCH score for each excessive sighting shot fired. This penalty is in addition to the penalty of two (2) points that may be imposed when an athlete loads more than the authorized number of cartridges.

8.8.2.3 Early Or Late Shots (25m)

a) Any shot(s) fired accidentally after the command **"LOAD,"** but before the start of a MATCH series, must not be counted in the competition and two (2) points must be deducted from the following series. This penalty must not apply in the Sighting series. The athlete who fired accidentally must not continue, but must wait until the other athletes finish that series and then report this to the Range Officer as if he had a malfunction. The Range Officer will then permit him to continue and repeat the series in the same time stage with the following regular series. The final series of the stage will be fired immediately after all athletes have completed that time stage. If this procedure is not followed and the athlete continues the original series, the accidentally fired shot will be scored as a miss (zero); and

b) In a Precision Stage, if a shot(s) is fired after the command or signal **"STOP,"** that shot must be counted as a miss. If the shot(s) cannot be identified the highest value hit(s) must be deducted from the score of that target and scored as miss(es).

Copyright: ISSF

8.8.2.4 Crossfires on Sighting Targets (25m)

If an athlete fires a Sighting shot on the sighting target of another athlete, he must not be allowed to repeat the shot, but will not be penalized. If it cannot be established clearly and quickly which hit(s) belong to whom, the athlete who is not at fault has the right to repeat the sighting shot(s).

8.8.3 Incorrect Range Commands (25m)

a) If, because of an incorrect command and/or action by a Range Officer, the athlete is not ready to fire when the signal to fire is given, he must hold his pistol pointing down range and raise his free hand, and immediately after the series report this to a Range Officer or Jury Member; and

b) If the claim is considered justified, the athlete must be allowed to fire the series; or

c) If the claim is considered not justified, the athlete may fire the series, but must be penalized by the deduction of two (2) points from the score of that series; or

d) If the athlete has fired a shot after the incorrect command and/or action, the protest must not be accepted.

8.8.4 Disturbances

Should an athlete consider that he was disturbed while firing a shot, he must hold his pistol pointing down range and immediately inform the Range Officer or Jury Member by raising his free hand. He must not disturb other athletes.

8.8.4.1 IF THE CLAIM IS CONSIDERED JUSTIFIED:

a) The series (25m Rapid Fire Pistol, 25m Standard Pistol), must be annulled and the athlete may repeat the series; and

b) The shot (25m Pistol and 25m Center Fire Pistol) must be annulled and the athlete may repeat the shot and complete the series.

EDITION 2017 | Second Print 01/2018
Copyright: ISSF

8.8.4.2 IF THE CLAIM IS CONSIDERED UNJUSTIFIED:

a) If the athlete has finished his series, the shot or series must be credited to the athlete;

b) If the athlete has not finished his series due to the claimed disturbance, the athlete may repeat or complete the series. Scoring and penalties are as follows;

c) In the **25m Rapid Fire Pistol Event** the series may be repeated and the score must be recorded as the total of the lowest value hit on each target;

d) In the **25m Standard Pistol Event** the series may be repeated and the score must be recorded as the total of the five (5) lowest value hits on the target;

e) In the **25m Pistol and 25m Center Fire Pistol Events** the series may be completed and the score must be recorded;

f) Two (2) points must also be deducted from the score of the repeated or completed series; and

g) In any repeated series, all five (5) shots must be fired at the target. Any shot(s) not fired or not hitting the target must be scored as a miss(es).

8.8.5 Timing Irregularity Claims

8.8.5.1 If an athlete considers that the time elapsed between the command specified in the Rules and the green light coming on or the facing of the targets was too fast or too slow, and therefore not according to the time specified in the Rules, he must hold his pistol pointing down range and immediately inform a Range Officer or Jury Member by raising his free hand. He must not disturb other athletes.

a) If it is found that his **claim is justified**, he may begin the series again; or

b) If his claim is found **not justified**, he may fire the series, but a two (2) point penalty must be deducted from the score of that series; and

c) Once the athlete has **fired the first shot** in the series, such a claim must not be accepted.

8.8.5.2 If an athlete considers that the **time of the series was too short**, he may inform a Range Officer immediately after finishing the series.

a) The Range Officer and/or Jury must verify the timing of the mechanism; and

b) If it is confirmed that there has been an error, the protesting athlete‘s series must be annulled and repeated; or

c) If the claim is considered not justified, the result of the series must be credited to the athlete and recorded.

Copyright: ISSF

8.9 MALFUNCTIONS IN 25M EVENTS

8.9.1 Malfunctions during a sighting series may not be claimed, however, an athlete may clear the malfunction and continue to shoot the unfired shots within the specified time for the sighting series for that event. Only one (1) malfunction (either ALLOWABLE or NON-ALLOWABLE) may be claimed during each MATCH stage(s) of a 25m Pistol event as follows:

a) Once in each 30 shot stage of the 25m Rapid Fire Pistol, 25m Pistol and 25m Center Fire Pistol events;

b) Once in the 150 sec. stage and once in the combined twenty (20) sec. and ten (10) sec. stages of the 25m Standard Pistol event;

c) The appropriate Malfunction Form (RFPM or STDP) must be used to score repeated malfunction series. Malfunction Forms are found in the General Technical Rules, Rule 6.18.

d) Malfunctions (ALLOWABLE or NON-ALLOWABLE) in 25m Finals will be decided according to 6.17.4 m) or 6.17.5 l).

8.9.2 Repairing or Replacing a Broken Gun

Should a pistol break or cease to function, the athlete is allowed to repair or replace the pistol. In all cases, the Chief Range Officer must confirm that the pistol cannot function safely and the Jury must be informed.

a) An athlete is allowed a maximum of 15 min. to repair or replace a pistol in order to resume the competition;

b) If the repair is likely to take more than 15 min., the athlete, at his request, may be granted more time by the Jury;

c) If extra repair time is granted, he will complete the competition at a time and place determined by the Jury or he may continue to fire with another pistol of the same type of mechanism (semiautomatic or revolver) and of the same caliber; and

d) In the 25m events the Jury must allow one (1) extra sighting series of five (5) shots.

EDITION 2017 | Second Print 01/2018
Copyright: ISSF

8.9.3 Malfunctions in 25m Pistol Events

a) If a shot has not been fired due to a malfunction, and if the athlete wishes to claim a malfunction, he must hold his pistol pointing down range, retain his grip, and immediately inform a Range Officer by raising his free hand. He must not disturb other athletes.

b) An athlete may try to correct a malfunction and continue the series, but after attempting any correction, he may not claim an Allowable Malfunction unless the firing pin has broken, or any other part of the pistol is damaged sufficiently to prevent the pistol from functioning.

8.9.4 Types of Malfunctions

8.9.4.1 ALLOWABLE MALFUNCTIONS (AM) are:

a) A bullet is lodged in the barrel;

b) The trigger mechanism has failed to operate;

c) There is an undischarged cartridge in the chamber and the trigger mechanism has been released and operated;

d) The cartridge case has not been extracted or ejected; this applies even if a case catcher is used;

e) The cartridge, magazine, cylinder, or other part of the pistol has jammed;

f) The firing pin has broken, or any other part of the pistol is damaged sufficiently to prevent the pistol from functioning;

g) The pistol fires automatically without the trigger being released. The athlete must stop firing immediately and must not continue to use such a pistol without the permission of a Range Officer or a Jury Member. When using electronic scoring targets, the first shot will be scored by the system and this will be credited to the athlete. When using paper targets, should the automatically fired shot(s) hit the target, the hit(s) found highest up on the target must be disregarded before the repeat series. After any repeat series, all the shot(s), except those that were disregarded on the one (1) target concerned, must be included to establish the score; or

h) The slide jams or the empty case is not ejected, this applies even if a case catcher is used.

Copyright: ISSF

8.9.4.2 NON-ALLOWABLE MALFUNCTIONS (NAM) are:

a) The athlete has touched the breech, mechanism or safety catch or the pistol has been touched by another person before being inspected by the Range Officer;

b) The safety catch has not been released;

c) The athlete did not load his pistol;

d) The athlete loaded fewer cartridges than prescribed;

e) The athlete did not allow the trigger to return far enough after the previous shot;

f) The pistol was loaded with the wrong ammunition;

g) The magazine was not inserted correctly, or had fallen out during shooting unless this is due to damage to the mechanism; or

h) The malfunction is due to any cause that could reasonably have been corrected by the athlete.

8.9.4.3 Determining the Cause of a Malfunction

If the external appearance of the pistol does not show an obvious reason for the malfunction and there is no indication, and the athlete does not claim that there may be a bullet stuck in the barrel, the Range Officer must take the pistol without interfering with or touching the mechanism, point the pistol in a safe direction and pull the trigger one time only to determine whether the trigger mechanism had been released.

a) If the pistol is a revolver, the Range Officer must not pull the trigger unless the hammer is in the cocked position;

b) If the pistol does not discharge, the Range Officer must complete the examination of the pistol to determine the cause of the malfunction and to decide whether or not the malfunction is allowable; and

c) The Range Officer decides, after inspection of the pistol, that there is an ALLOWABLE MALFUNCTION or a NON-ALLOWABLE MALFUNCTION.

8.9.4.4 In the case of a **NON-ALLOWABLE MALFUNCTION,** every shot that is not fired will be scored as a miss (zero). No re-fire or completion is permitted. Only the values of shots fired will be credited to the athlete. The athlete may continue to shoot the remainder of the event.

EDITION 2017 | Second Print 01/2018
Copyright: ISSF

8.9.4.5 **ALLOWABLE MALFUNCTION PROCEDURES –** 25m Rapid Fire Pistol and 25m Standard Pistol

a) If an ALLOWABLE MALFUNCTION occurs during a 25m Rapid Fire Pistol Men or 25m Standard Pistol Men series, record the scores of the shots that were fired on first line of the Malfunction Form (Form RFPM or Form STDP); and

b) The athlete must fire all five (5) shots at the target(s) in any repeat series. After the repeat series, record the scores of all shots fired on the second line of the Malfunction Form; any shots not hitting the target or late shots, fired or unfired, must be scored as zero(s); or

c) If a second malfunction occurs in the repeat series, record the scores of the fired shots in the repeat series on the second line of the Malfunction Form. Then add zeros to the line (first series or repeat series) that has scores for the most fired shots to ensure that one line has five scores. These added zeros must be counted in determining the score for that series; and

d) Determine the scores of the five shots to be counted for the series and record them on the third line of the Malfunction Form ("Final Score"):

- RFPM: enter the lowest value scores on each of the five targets and total scores.

- STDP: enter the five lowest value scores from all recorded shots, including any zeros that were added to one of the two lines, and total those scores.

8.9.4.6 **ALLOWABLE MALFUNCTION PROCEDURES –** 25m Pistol and 25m Center Fire Pistol

Precision and Rapid Fire Stages:

a) The number of shots is recorded and the series may be completed;

b) Shot(s) to complete the series (series completion) must be fired in the next competition series; in the Precision Stage a time of one (1) minute will be allowed for each shot to be fired; in the Rapid Fire Stage, the series completion must start on the first exposure;

c) Any shot(s) not fired or not hitting the target must be scored as miss(es) (zero(s);

d) The five-shot series must be scored in the normal manner; and

e) Use Form IR to report series completion.

Copyright: ISSF

8.10 FAILURE OF EST OR PAPER TARGET SYSTEMS

8.10.1 Failure of ALL targets on a Range or Range Section

a) The expired shooting time must be recorded by the Chief Range Officer and the Jury;

b) All completed MATCH shots of each athlete must be counted and recorded. In the event of a range power supply failure, this may involve waiting until power is restored to enable the number of shots registered by the target, not necessarily on the firing point monitor, to be established;

c) After the targets are repaired and the full range, or Range Section, is in operation, an additional Sighting series and a one (1) minute pause will be given before starting the completion of the series in accordance with the following rules;

d) **25m Pistol and 25m Center Fire Pistol Events.** The athletes will COMPLETE the series of five shots in the same way as for an ALLOWABLE MALFUNCTION. The athlete should fire the number of shots that had not been recorded by the target when the failure occurred.

e) **25m Standard Pistol and 25m Rapid Fire Pistol Events.** If the series was not completed and recorded, it will be annulled and repeated. If the five (5) shots were recorded for any athlete, the series score will be recorded and no repetition will be permitted by that athlete.

8.10.2 Failure of a Single Target or Target Group

If there is a failure of a single target or group of five targets (25m Rapid Fire Pistol event) that cannot be repaired immediately, the athlete will be moved to another firing position in the same, or a following relay. After the problem is resolved, a separate sighting series and a one (1) minute pause will be given before the firing of the next series in accordance with the rule above (8.10.1.c).

EDITION 2017 | Second Print 01/2018
Copyright: ISSF

8.10.3 Failure to Register or Display a Shot

If there is a complaint concerning **failure to register or display a shot on the monitor(s) of 25m** Electronic Scoring Target systems, or the monitor shows a zero (0) that was not expected:

a) In the Precision Stages of 25m Pistol and 25m Center Fire Pistol events and in the 150 sec. series of the 25m Standard Pistol event, the athlete must immediately (before the next shot) inform the nearest range official of the failure;

b) In the Rapid Fire Stages of the 25m Pistol and 25m Center Fire Pistol events and in the Rapid Fire Stages of the 25m Standard Pistol event, the athlete must continue the five (5) shot series and must inform the nearest range official of the failure immediately after the end of the series;

c) The athlete will then be directed to complete the series at a time decided by the Jury; and

d) There will be no repeat series. The score will be determined by the RTS Jury. After the series has been completed, the Procedure for Examination of Electronic Scoring Targets (6.10.8) will be applied.

Copyright: ISSF

8.11 PISTOL EVENTS QUALIFICATION TABLE

Event	Men/ Women	Number of shots	Number of Shots per competition target (paper)	Number of Sighting Targets (paper)	Number of Sighting Shots	Scoring and Patching Paper Targets	Time Limits	Preparation and Sighting Time
10m Air Pistol	Men & Women	60	1	4	Unlimited during Preparation and Sighting Time	In the RTS Office	75 minutes (60) 90 minutes (60), if EST are not available	15 Minutes
10m Mixed Team	Men & Women	2x40	1	4	Unlimited during Preparation and Sighting Time	In the RTS Office	50 minutes, 60 minutes if EST are not available	10 Minutes
50m Pistol	Men	60	5	2	Unlimited during Preparation and Sighting Time	In the RTS Office	1 hour 30 minutes, 1 hour 45 minutes, if EST are not available	15 Minutes
25m Rapid Fire Pistol	Men	60	7 shots per target per stage (1 sighting series plus 6 Match series) New targets after each stage		1 series of 5 shots in 8 seconds in each stage	After every 5 shot series	2 stages of 30 shots of 2 five-shot-series in 8, 6, 4 seconds	3 Minutes Preparation
25m Pistol	Women	60	10	1	1 series of 5 shots in each stage	After every 5 shot series	Precision Stage: 5 min. each for 6 5-shot series. Rapid Fire Stage: 6 5-shot series in rapid fire program.	Precision Stage: 5 Minutes Preparation Rapid Fire Stage: 3 Minutes Preparation
25m Center Fire Pistol	Men	60	10					
25m Standard Pistol	Men	60	10		1 series of 5 shots in 150 seconds stage only		4 five-shot-series in 150, 20, 10 seconds	

EDITION 2017 | Second Print 01/2018
Copyright: ISSF

8.12 PISTOL SPECIFICATION TABLE

Pistol Type	1) Pistol Weight 2) Trigger Pull	Measuring Box (mm)	Barrel Length Sight Radius	Grips	Other specifications
10m Air Pistol	1) 1500 g max. 2) 500 g min.	420 x 200 x 50	Box Size Only	See below	May only be loaded with one (1) pellet. Ported barrels and perforated barrel attachments are allowed.
50m Pistol	1) No Restriction 2) No Restriction	No Restriction	No Restriction No Restriction	Special grips are permitted	May only be loaded with one (1) cartridge. Hand covers will be permitted, providing they do not cover the wrist.
25m Rimfire Pistol	1) 1400 g max. 2) 1000 g min.	300 x 150 x 50	max. 153 mm max. 220 mm	See below	Compensators, muzzle brakes, perforated barrels or any device(s) functioning in a similar manner are not allowed.
25m Center Fire Pistol	1) 1400 g max. 2) 1000 g min.				

a) 10m Air Pistol Grips: No part of the grip, frame or accessories may touch any part of the wrist. The heel rest must extend at an angle of not less than 90 degrees to the grip. This applies to the heel rest in front and behind the grip as well as on the sides. Any upward curvature of the heel and/or thumb rest and/or a downward curvature of the side opposite the thumb is prohibited. The thumb rest must allow free upward movement of the thumb. The grip must not encircle the hand. Curved surfaces on the grips or frame, including the heel and/or thumb rest, in the longitudinal direction of the pistol are permitted.

b) 25m Pistol Grips: Note a) applies. In addition, the rear part of the frame or grip which rests on top of the hand between the thumb and the forefinger, must not be longer than 30 mm from the point where the grip first touches the top of the hand forward to the deepest part of the grip. The back (rear) part of the grip must be cut so that it angles upward from that point by not less than 45 degrees.

c) The weight of the pistol is measured with all accessories, including balancing weights and unloaded magazine.

d) Measuring Box: The pistol is measured with all accessories in place (if an Air Pistol is used with a magazine it may be measured with the magazine removed). A manufacturing tolerance of the rectangular Measuring Box of 0.0 mm to + 1.0 mm in each dimension is permitted.

Copyright: ISSF

8.13 PISTOL CONFIGURATION DRAWING (10M AND 25M PISTOLS)

For 25m Pistols Only

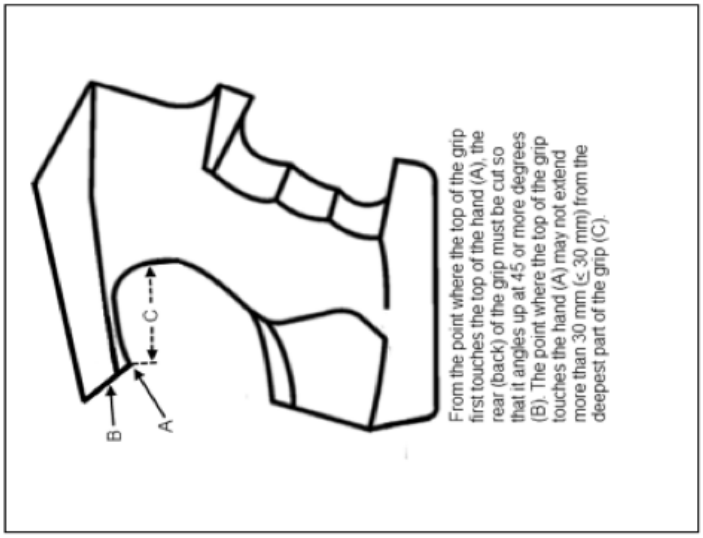

For 10m and 25m Pistols

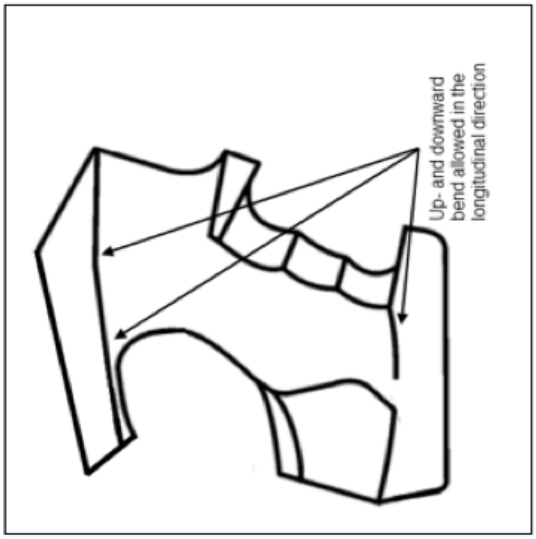

For 10m and 25m Pistols

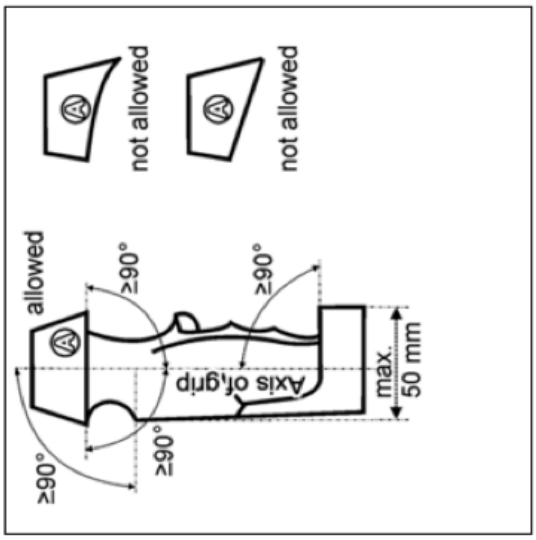

For 25m Pistols Only

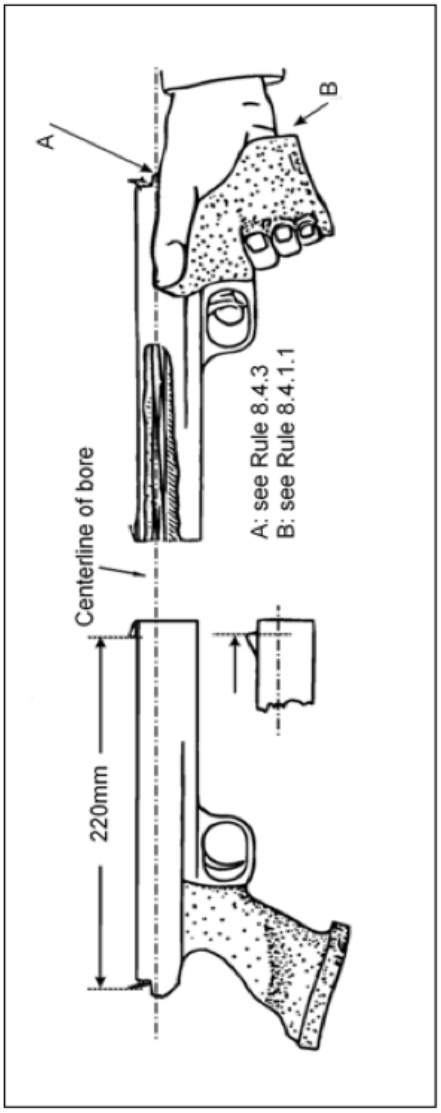

EDITION 2017 | Second Print 01/2018
Copyright: ISSF

8.14 INDEX

25m Events	8.11
25m Events – Allowable Malfunctions (AM)	8.9.4.1
25m Events – Claiming a Malfunction	8.9.3
25m Events – Control of Timing	8.7.6.2 a
25m Events – Correcting a Malfunction	8.9.3 b
25m Events – Determining the Cause of a Malfunction	8.9.4.3
25m Events – Determining Allowable / Non Allowable Malfunction	8.9.4.3 c
25m Events – Early and late Shots	8.8.2.3
25m Events – Early and late Shots – Deduction of Points	8.8.2.3
25m Events – Firing before the Command “LOAD”	8.7.6.2 e
25m Events – Firing after an incorrect Range Command	8.8.3 d
25m Events – Incorrect Range Commands	8.8.3
25m Events – Incorrect Range Commands – Deduction of Points	8.8.3 c
25m Events – Interruptions of more than 15 Minutes	8.8.1 a
25m Events – Irregular Shots	8.8.2
25m Events – Load command	8.7.6.2
25m Events – Load with more than 5 Cartridges	8.7.6.2 c
25m Events – Malfunctions	8.9.3
25m Events – Malfunctions during the Sighting Series	8.9.3 c
25m Events – Malfunctions - Number of Repeating	8.9.1 c
25m Events – Non Allowable Malfunctions	8.9.4.2
25m Events – Start and End of Timing	8.7.6.2 a
25m Events – Timing Irregularity Claims	8.8.5
25m Events – Too many Competition Shots fired	8.8.2.1
25m Events – Too many Sighting Shots fired	8.8.2.2
25m Events – Types of Malfunctions	8.9.4
25m Events – Unload Command	8.7.6.2 f
25m Events and Stages – Crossfires on sighting targets	8.8.2.4
25m Malfunction Repair– Complete the Competition – Determined by Jury	8.9.2 c
25m Pistol / 25m Center Fire Pistol or Revolver – Late Shots Prec. Stage	8.8.2.3 b
25m Pistol / 25m Center Fire Pistol or Revolver – Commands	8.7.6.4
25m Pistol / 25m Center Fire Pistol or Revolver – Interrupted Series	8.8.1 c / 8.8.1 d
25m Pistol / 25m Center Fire Pistol or Revolver – Prec. Stages –Completion after allowable malfunction	8.9.4.6
25m Pistol / 25m Center Fire Pistol or Revolver – Precision Stage	8.7.6.4
25m Pistol / 25m Center Fire Pistol or Revolver – Procedure after AM	8.9.4.6

Copyright: ISSF

25m Pistol / 25m Center Fire Pistol or Revolver – Rapid Fire Stage	8.7.6.4
25m Pistol / 25m Center Fire Pistol or Revolver – Scoring AM	8.9.4.6
25m Pistol / 25m Center Fire Pistol or Revolver – Sighting Series	8.7.6.4 a
25m Pistol / 25m Center Fire Pistol or Revolver – Specific Rules	8.7.6.4
25m Pistol / 25m Center Fire Pistol or Revolver – Start of a Series	8.7.6.4 j
25m Pistol / 25m Center Fire Pistol or Revolver – Two Shots fired Exposure	8.8.2.1 c
25m Pistol / 25m Center Fire Pistol or Revolver Event divided into 2 Stages	8.7.6.4
25m Pistol and 25m Centre Fire Pistol or Revolver Events Table	8.11
25m Pistol Events – Complaint concerning Failure to display a Shot	8.10.3
25m Pistol Events – Failure of a single Target	8.10.2
25m Pistol Events – Failure of EST or Paper Target Systems	8.10
25m Rapid Fire Pistol – Ammunition collection for Testing	8.4.4.2
25m Rapid Fire Pistol – Announcement of Series	8.7.6.3 e
25m Rapid Fire Pistol – Commands in Qualification Event	8.7.6.3
25m Rapid Fire Pistol – Events	8.7.6.3
25m Rapid Fire Pistol –Facing the Targets on seven Seconds ±0.1 Seconds	8.7.6.3 f / 8.7.6.3 h
25m Rapid Fire Pistol – Interrupted Series	8.8.1 b
25m Rapid Fire Pistol – Pause of 1 Minute before next command “Load”	8.7.6.3 l
25m Rapid Fire Pistol – Procedure after AM	8.9.4.5
25m Rapid Fire Pistol – Ready Position	8.7.6.3 g 8.7.2
25m Rapid Fire Pistol – Re-firing in the same Time Stage	8.7.6.3 d
25m Rapid Fire Pistol – Scoring AM	8.9.4.5
25m Rapid Fire Pistol – Shooting on Command	8.7.6.3 c
25m Rapid Fire Pistol – Sighting Series	8.7.6.3 b
25m Rapid Fire Pistol – Specific Rules	8.7.6.3
25m Rapid Fire Pistol – Start of a Series – Attention	8.7.6.3 f
25m Rapid Fire Pistol – Velocity Test	8.4.4.1
25m Rapid Fire Pistol – Velocity Test Procedure	8.4.4.2
25m Rimfire Pistol	8.4.3.1
25m Standard Pistol – Announcement of Series	8.7.6.5 b
25m Standard Pistol – Commands	8.7.6.5 d
25m Standard Pistol – Event divided into 3 Stages	8.7.6.5
25m Standard Pistol – Events	8.7.6.5
25m Standard Pistol – Interrupted Series	8.8.1.b
25m Standard Pistol – Procedure after AM	8.9.4.5

EDITION 2017 | Second Print 01/2018
Copyright: ISSF

25m Standard Pistol – Ready Position	8.7.6.5 e 8.7.2
25m Standard Pistol – Scoring AM	8.9.4.5
25m Standard Pistol – Sighting Series	8.7.6.5 a
25m Standard Pistol – Specific Rules	8.7.6.5
25m Standard Pistol – Start of a Series – Attention	8.7.6.5 d
50m Pistol – Caliber allowed	8.4.3.4 a
50m Pistol – Hand Covers	8.4.3.4 b
Allowable Malfunctions – 25m Events	8.9.4.1
Ammunition Specifications	8.4.4
Application of Rules for all Pistol Events	8.1.1
Barrels – See the Pistol Specification Table (8.12)	8.4.1.2
Case Catchers	8.4.1.5
Center Fire Pistol – Caliber allowed	8.4.4
Center Line of the Bore – 25m Pistols	8.4.3.1 b
Compensators 25m – Not Allowed	8.12
Competition Rules	8.7
Complaint concerning Failure to display a Shot – 25m Pistol Events	8.10.3
Complete the Competition – Determined by the Jury – 25m Malfunction	8.9.2 c
Continue with replacement 25m Pistol after Malfunction	8.9.2
Correcting Lenses	8.4.1.3 e
Correction Glasses	8.4.1.3 f
Crossfires on Sighting Targets – 25m	8.8.2.4
Deduction of Points – 25m Events – Too many Shots fired	8.8.2.1
Deduction of Points – Disturbances – Claim not justified	8.8.4 f
Deduction of Points – Early and late Shots – 25m Events	8.8.2.3
Deduction of Points – Load with more than 5 Cartridges	8.7.6.2 d
Deduction of Points – Not sufficiently lowering the Pistol Arm	8.7.4 c
Deduction of Points – Range Commands Incorrect – 25m Events	8.8.3 c
Deduction of Points – Timing – 25m Events – Claim is not justified	8.8.5.1 b
Disqualification – Firing before the Command “LOAD”	8.7.6.2 e
Disqualification – Raising the Pistol Arm too soon	8.7.4 d
Disturbances – 25m Events	8.8.4
Disturbances – 25m Events Claim justified	8.8.4.1
Disturbances – 25m Events Claim not justified	8.8.4.2
Disturbances – Claim not justified – Deduction of Points	8.8.4.2 f
Early and late Shots – 25m Events	8.8.2.3
Electronic Triggers	8.4.1.4

Copyright: ISSF

Equipment and Ammunition	8.4
Extra Time to repair a 25m Pistol, granted by the Jury – Malfunction	8.9.2 b
Failure of a single Target or Target Group – 25m Pistol Events	8.10.2
Failure of all Targets on a Range or Range Section	8.10.1
Failure of Electronic Scoring Target Systems / Paper Targets Systems	8.10
Firing – After an incorrect Range Command – 25m Events	8.8.3 d
Firing Position	8.7.1
Forms used for Malfunctions – See Technical Rules before the Index	6.18 e /6.18 f
General – Malfunction of a Pistol – Repair / Information	8.9.2
General Pistol Rules	8.1
General Standards for all Pistols	8.4.1
Grips – See the Pistol Specification Table and Table of Drawings	8.4.1.1
Holding of Pistol with one hand	8.7.1
Incorrect Range Commands – 25m Events	8.8.3
Interrupted Series – 25m Pistol / 25m Center Fire Pistol	8.8.1 c
Interrupted Series – 25m Rapid Fire Pistol / 25m Standard Pistol	8.8.1 b
Interrupted Series – Malfunction in 25m Events	8.9.1 c
Interruptions – 25m Events and Stages	8.8.1
Irregular Shots – 25m Events	8.8.2
Knowledge of the Rules	8.1.2
Late Shots Precision Stage – 25m Pistol / 25m Center Fire Pistol	8.8.2.3 b
Left-handed Athlete – Right-handed Athlete	8.1.3
Magnum Ammunition – Not Allowed	8.4.4
Malfunction – Determining the Cause	8.9.4.3
Malfunction – Extra Time to repair a 25m Pistol, granted by the Jury	8.9.2 b
Malfunction – Maximum Time to repair or replace a 25m Pistol	8.9.2 a
Malfunction – Sighting Series 25m Events	8.9.1
Malfunction of a Pistol – Allowance to repair the Pistol	8.9.2
Malfunction of a Pistol – Inform the Jury of Repair	8.9.2
Malfunctions 25m Events	8.9
Malfunctions Repairs	8.9.2
Maximum Time to repair or replace a 25m Pistol – Malfunction	8.9.2 a
Measurement of Barrels – 25m Pistols	8.4.1.2
Measurement of Barrels – 25m Pistols Specification Table	8.12
Measuring Box	8.12 d
Men's Events / Women’s Events	8.1.4
Movement or Oscillation Reduction Systems	8.4.1.6
Muzzle Brakes – Not Allowed 25m	8.12

EDITION 2017 | Second Print 01/2018
Copyright: ISSF

Non Allowable Malfunctions – 25m Events	8.9.4.2
Number of Allowable Malfunctions 25m Events	8.9.1
Pistol Events – See the Pistol Events Qualification Table	8.11
Pistol Support Stands	8.6.3
Pistol Transport Boxes	8.6.2
Preparation and Sighting Time 10m and 50m Pistol Events	8.11
Preparation Time – Handling of Pistols, Sighting Targets visible	8.7.6.1 d
Preparation Time – Pre-competition Checks	8.7.6.1 c
Preparation Time – Time in Minutes 10m and 50m Events	8.11
Preparation Time 25m Events	8.7.6.1
Random Trigger Weight Checks	8.4.2.3
Range and Target Standards	8.3
Ready Position	8.7.2
Ready Position – Not sufficiently lowering the Pistol Arm	8.7.3 b
Ready Position – Raising the Pistol Arm too soon	8.7.3 a
Ready Position 25m Events	8.7.2
Ready Position 25m Events – Drawing	8.7.2
Report of the Athlete – Preparation Time	8.7.6.1 a
Right-handed Athlete – Left-handed Athlete	8.1.3
Safety	8.2
Shoe Sole Flexibility Measuring Device	8.5.5
Shoe Sole Flexibility Standard	8.5.6
Shoes	8.5
Shooting Accessories	8.6
Shooting Event Procedures and Competition Rules	8.7
Sighting Series 25m Events – Malfunction	8.9.3 c
Sights – See the Pistol Specification Table (8.12)	8.4.1.3
Specific Standards for 25m Pistols	8.4.3
Spotting Telescopes	8.6.1
Table – Pistol Drawings and Measurements	8.13
Table – Pistol Event Table	8.11
Table – Pistol Specification Table	8.12
Telescopes for Spotting	8.6.1
Timing – 25m Events - Irregularities	8.8.5.1
Timing – 25m Events – Claim is justified	8.8.5.1 a
Timing – 25m Events – Claim is not justified	8.8.5.1 b
Too many Shots fired – 25m Events	8.8.2.1
Too many Sighting Shots fired – 25m Events	8.8.2.2

Copyright: ISSF

Trigger Pull – Measurement	8.4.2
Trigger Pull – Measurement – Maximum 3 Attempts	8.4.2/ 8.4.2.3
Trigger Pull – Measurement – Random Checks	8.4.2.3
Trigger Pull – Test Weight on the Range - Available to the Athletes	8.4.2.2
Two Shots fired in an Exposure – 25m Pistol/25m Center Fire Pistol	8.8.2.1 c
Types of Malfunctions	8.9.4
Types of Malfunctions – 25m Events	8.9.4
Velocity Test – 25m Rapid Fire Pistol	8.4.4.1
Velocity Test – 25m Rapid Fire Pistol – Testing Procedure per Relay	8.4.4.2
Women's Events / Men’s Events	8.1.4
Wrist – Visibly free of Support	8.7.1

Copyright: ISSF

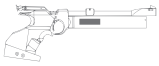

Copyright: ISSF

International Shooting Sport Federation
Internationaler Schiess-Sportverband e.V.
Fédération Internationale de Tir Sportif
Federación Internacional de Tiro Deportivo

9. SHOTGUN RULES

FOR
Trap
Double Trap
Skeet
Trap Mixed Team

EDITION 2017 | Second Print 01/2018
Copyright: ISSF

Chapters

9.1	**GENERAL**	***448***
9.2	**SAFETY**	***448***
9.3	**RANGE AND TARGET STANDARDS**	***451***
9.4	**EQUIPMENT AND AMMUNITION**	***451***
9.5	**COMPETITION OFFICIALS**	***455***
9.6	**SHOOTING EVENTS and COMPETITION PROCEDURES**	***461***
9.7	**TARGETS – REGULAR, IRREGULAR, BROKEN, HIT, LOST AND NO TARGETS**	***462***
9.8	**COMPETITION RULES FOR TRAP**	***464***
9.9	**COMPETITION RULES FOR DOUBLE TRAP**	***473***
9.10	**COMPETITION RULES FOR SKEET**	***481***
9.11	**COMPETITION ADMINISTRATION**	***495***
9.12	**MALFUNCTIONS**	***497***
9.13	**COMPETITION CLOTHING AND EQUIPMENT**	***500***
9.14	**RESULTS, TIMING AND SCORING (RTS) PROCEDURES**	***501***
9.15	**TIES AND SHOOT-OFFS**	***504***
9.16	**RULE VIOLATIONS**	***510***
9.17	**PROTESTS AND APPEALS**	***514***
9.18	**FINALS IN OLYMPIC SHOTGUN EVENTS**	***516***
9.19	**TRAP MIXED TEAM EVENT**	***524***
9.20	**DRAWINGS AND TABLES**	***531***
9.21	**INDEX**	***538***

NOTE:

Where figures and tables contain specific information, these have the same authority as the numbered rules.

Copyright: ISSF

9.1 GENERAL

9.1.1 These Rules are part of the ISSF Technical Rules and apply to all Shotgun events.

9.1.2 All athletes, coaches, team leaders and officials must be familiar with the ISSF Rules and must ensure that these Rules are enforced. It is the responsibility of each athlete to comply with the Rules.

9.1.3 When a Rule refers to right-handed athletes, the reverse of that Rule refers to left-handed athletes.

9.1.4 Unless a Rule applies specifically to a men's or a women's event, it must apply uniformly to both men's and women's events.

9.1.5 Where figures and tables in these rules contain specific information, the specific information in these figures and tables has the same authority as the numbered rules.

9.2 SAFETY

SAFETY IS OF PARAMOUNT IMPORTANCE

See ISSF General Technical Rules, Rule 6.2.

9.2.1 The safety of athletes, range personnel and spectators requires continued and careful attention to gun handling and caution in moving about the range. It is strongly recommended that all personnel operating forward of the firing line should wear high visibility vests or jackets. Self discipline is necessary on the part of all.

EDITION 2017 | Second Print 01/2018
Copyright: ISSF

9.2.2 Carrying Guns

To ensure safety, all shotguns, even when empty, must be handled with maximum care at all times (penalty - possible **DISQUALIFICATION**).

a) Conventional double barrel guns must be carried empty with the breech visibly open;

b) Semi-automatic guns must be carried with the breech bolt visibly open, with a safety flag inserted, and the muzzle pointed in a safe direction, up to the sky or down towards the ground only;

c) Shotguns not in use must be placed in a gun rack, locked gun case, armory or other secure place;

d) All shotguns must be kept unloaded except on the shooting station and only then after the command or signal **"START"** has been given;

e) Cartridges must not be loaded in the gun until the athlete is standing on the shooting station, facing the traps with the gun pointed towards the target flight area and after the Referee has given permission (Exceptions, see Rule 9.9.2.g);

f) When shooting is interrupted, the gun must be opened and any cartridges or empty cartridge cases must be removed;

g) No athlete may turn from the shooting station before his gun is open and empty;

h) After the last shot and before leaving the range or placing the gun on a rack, armory etc., the athlete must ascertain and the Referee must verify that there are no cartridges or empty cartridge cases in the chamber and/or magazine; and

i) The handling of closed guns is prohibited when operating personnel are forward of the firing line.

9.2.3 Aiming

a) Aiming exercises are permitted only on designated shooting stations with the permission of the Referee, or in designated dry firing areas;

b) Aiming or shooting at another athlete's targets or deliberately aiming or shooting at live birds or other animals is prohibited; and

c) Aiming in any area other than in designated dry firing areas is prohibited.

Copyright: ISSF

9.2.4 Shooting and Test Firing

a) Shots may be fired only when it is the athlete's turn and the target has been thrown;

b) By permission of the Referee, test firing of shotguns (a maximum of two (2) shots) is permitted for each athlete on each day of competition immediately prior to the start of his first round of the day;

c) Test firing of shotguns is also permitted for each athlete prior to the start of a Final or any shoot-offs before a Final;

d) Test shots must not be fired into the ground within the shooting areas; and

e) Test firing of a shotgun after a gun repair is permitted, but it must be arranged with the Chief of Referees or the Chief Range Officer.

9.2.5 "STOP" Command

a) When the command or the signal **"STOP"** is given, shooting must stop immediately and all athletes must unload their shotguns and make them safe;

b) No shotgun may then be closed until the command to continue **("START")** has been given;

c) Shooting may only be resumed at the appropriate command **("START")** or signal; and

d) Any athlete who handles a closed gun after the **"STOP"** command has been given, without the permission of the Referee, may be disqualified.

9.2.6 Commands

a) All range commands must be given in the English language;

b) The Referees or other appropriate range officials are responsible for giving the commands **"START," "STOP"** and other necessary commands; and

c) The Referees must then ascertain that the commands are obeyed and that all shotguns are handled safely.

EDITION 2017 | Second Print 01/2018
Copyright: ISSF

9.2.7 Eye And Ear Protection

a) All athletes and other persons in the vicinity of the firing line are urged to wear ear plugs, ear muffs, or similar adequate ear protection;

b) Hearing protection incorporating any type of sound-enhancing or receiving devices may not be worn by athletes or coaches on the FOP. Hearing impaired athletes may wear sound-enhancing devices with the approval of the Jury (see also GTR 6.2.5); and

c) All athletes, Referees and officials are urged to wear shatterproof shooting glasses or similar eye protection.

9.3 RANGE AND TARGET STANDARDS

a) Clay target standards are found in GTR 6.3.6.

b) Range standards for Shotgun ranges are found in GTR 6.4.17-6.4.20.

c) No athlete, coach or team official may interfere in any way with the range equipment (traps, microphones, trap computer, etc.) once set by the Referee or Jury. For a first violation, a **Warning (Yellow Card)** will be given to the athlete; a second violation will result in a one (1) point **Deduction (Green Card)** from the last hit target in the last completed round. Any subsequent occurrence will result in **Disqualification (Red Card)**. The deliberate switching off of the trap computer will result in an immediate disqualification. If a coach or team official violates this rule, the warning or penalty shall be given to all athletes in the event from that country.

9.4 EQUIPMENT AND AMMUNITION

9.4.1 Equipment Restrictions

Athletes must use only equipment and clothing that comply with ISSF Rules. Any gun, device, equipment, accessory or other item that may give an athlete an unfair advantage over others and that is not specifically mentioned in these Rules, or that is contrary to the spirit of these Rules, including accessories or devices used to facilitate the counting of targets or the use of shotshells with colored wads is prohibited (see GTR 6.1.4).

For a violation of these Rules, the athlete must receive a **Warning (Yellow Card)** for the first occurrence. For a repeat violation, the athlete must receive a **Deduction (Green Card)** of five (5) targets from the last five (5) hit targets in the last completed round.

Copyright: ISSF

9.4.1.1 Equipment Control

Athletes are responsible for ensuring that all items of equipment and clothing used by them in ISSF Championships comply with ISSF Rules. The Shotgun Jury is responsible for checking athletes' equipment to ensure compliance. The Jury must provide an equipment control consultation service that is available to all athletes starting on the first Pre-Event Training day so that athletes, if they wish, may have their equipment checked prior to the competition. To ensure compliance with ISSF Rules, the Jury will conduct random checks during Competition and any athlete found to be in violation of the rules for guns or Skeet marker tapes must be disqualified.

9.4.1.2 Equipment on the Field of Play / Shooting Area

Any equipment or accessories on the field of play/shooting area shall be deemed as available for use by the athlete concerned and will be subject to inspection/ check by the Jury. Penalties will be applied.

9.4.2 Shotguns

9.4.2.1 Types of Shotguns

All types of smoothbore shotguns, including semi-automatics, but excluding pump action shotguns, may be used, provided their caliber does not exceed 12 gauge. Shotguns smaller than 12 gauge may be used. Shotguns must not have a camouflage finish.

9.4.2.2 Release Triggers

Guns with any type of “release” trigger mechanisms are prohibited.

9.4.2.3 Slings

Slings or straps on guns are prohibited.

9.4.2.4 Magazines

Guns with magazines must have the magazine blocked so that it is not possible to put more than one (1) cartridge in the magazine.

9.4.2.5 Changing Guns

The changing of properly functioning guns or parts of guns, including interchangeable chokes, is not permitted in the same round.

9.4.2.6 Compensators

The addition of compensators and similar devices fitted to gun barrels is prohibited, except that ported interchangeable chokes are permitted (see 9.4.2.7 b)).

EDITION 2017 | Second Print 01/2018
Copyright: ISSF

9.4.2.7 Ported Barrels and Ported Interchangeable Chokes (with or without porting)

a) Ported barrels are permitted, provided they do not extend back further than 20 cm as measured from the end of the muzzle, or as measured from the muzzle end of any interchangeable fitted choke; and

b) Interchangeable chokes (with or without porting) fitted to the end of the muzzle are permitted. In the case of ported interchageable chokes, their porting (plus any barrel porting) shall not extend back further than 20 cm as measured from the muzzle end of the interchangeable fitted choke.

9.4.2.8 Optical Sights

All devices fitted to the gun that have magnifying, light emitting, forward lead displacement properties, or that give visual enhancement of the target, are prohibited.

9.4.2.9 Buttstock Depth

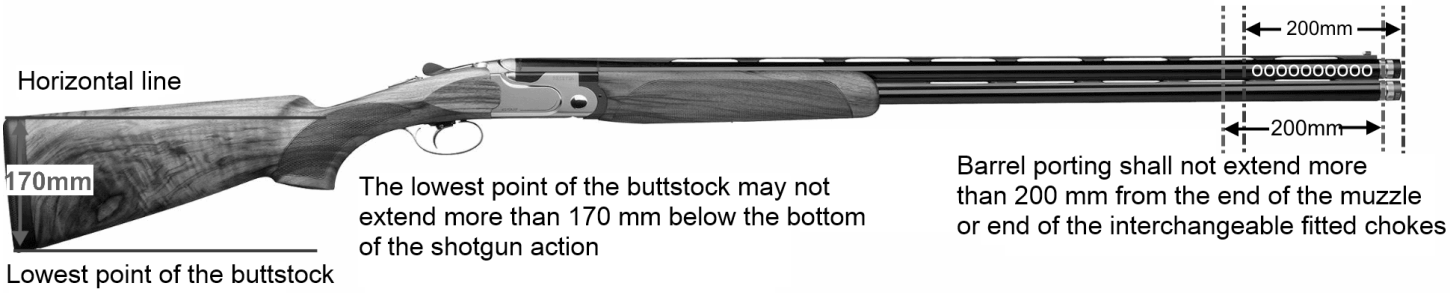

The lowest point of the buttstock or toe of the butt plate may not be more than 170 mm below a horizontal line extending from the bottom of the shotgun action (see illustration).

Copyright: ISSF

9.4.3 Ammunition

9.4.3.1 Cartridge Specifications

Cartridges permitted in ISSF competitions must meet the following specifications:

a) Shot charge must not exceed 24.0 g (+0.5 g tolerance). To determine if an athlete is using cartridges that comply with this rule, the cartridge inspection procedure must determine that the average weight of the selected cartridges does not exceed the maximum shot charge plus tolerance (24.5 g);

b) Pellets must be spherical in shape;

c) Pellets must be made of lead, lead alloy or of any other ISSF approved material;

d) Pellets must not exceed 2.6 mm in diameter;

e) Pellets may be plated;

f) Only transparent or translucent wads with no color may be used;

g) Black powder, tracer, incendiary, or other special types of cartridges are prohibited; and

h) No internal changes may be made which will give an extra or special dispersion effect, such as the inverse loading of components, crossing devices, etc.

9.4.3.2 Cartridge Inspection

The Equipment Control or Shotgun Jury must implement a cartridge inspection procedure that is approved by the ISSF Executive Committee. Specific details for conducting the cartridge inspection procedure are found in the Shotgun Equipment Control Guide that is available from ISSF Headquarters.

a) A Jury member may take an athlete‘s cartridges for inspection at any time when the athlete is in the shooting area.

b) When cartdriges are sold to participating teams at a Championship site, the Equipment Control or Shotgun Jury must test selected samples of these cartridges before the PET for the first event and post the results of these tests so that this information is available to coaches and athletes.

c) If an athlete uses ammunition that is not in accordance with Rule 9.4.3.1) a) (maximum shot charge), he must be **Disqualified (Red Card)**; and

d) If an athlete uses ammunition that is not in accordance with Rule 9.4.3.1 b) - h) he must receive a **Warning (Yellow Card)** or **Deduction (Green Card)** according to 9.4.1.

EDITION 2017 | Second Print 01/2018
Copyright: ISSF

9.5 COMPETITION OFFICIALS

9.5.1 General

All persons who are designated to serve as officials in ISSF competitions must possess valid qualifications appropriate to the level of the competition. When on duty, all Jury Members are required to wear the ISSF Jury (red) Vest that must be purchased from ISSF Headquarters. When on duty, all Referees are required to wear the ISSF Shotgun Referee (blue) Vest that must be purchased from ISSF Headquarters.

9.5.2 Jury

9.5.2.1 Duties Before the Competition Starts

Before the competition starts, the Jury must:

a) Check the ranges to ensure that they comply with these Rules;

b) Ensure that targets are correctly set according to these Rules;

c) Review the competition organization to confirm that it is prepared to conduct the competition; and

d) Establish an equipment control consultation service where athletes may have their guns, clothing and accessories checked.

Copyright: ISSF

9.5.2.2 Duties During the Competition

During the competition, the Jury must:

a) Supervise the competition;

b) Advise and assist the Organizing Committee;

c) Ensure the correct application of the shooting regulations;

d) Check the athletes' guns, ammunition and equipment;

e) Check that the targets are set correctly after a trap machine breakdown;

f) Make random checks during Qualification Rounds to ensure compliance with Preparation Time Limits;

g) Make random checks during Competition to ensure compliance with the rules concerning guns, ammunition, shooting vests and other clothing;

h) Deal with protests that are properly submitted;

i) Enforce the ISSF Eligibility, ISSF Commercial Rights and ISSF Sponsorship/ Advertising Rules;

j) Make decisions regarding penalties;

k) Implement sanctions where appropriate; and

l) Make decisions in any cases that are not provided for in the Rules, or are against the spirit of these rules.

9.5.3 Chief Range Officer

9.5.3.1 The Chief Range Officer is appointed by the Organizing Committee. He should have a wide experience in shotgun shooting and a thorough knowledge of shotguns and range equipment. He should hold a valid ISSF Shotgun Referee's or Judge's license.

9.5.3.2 The Chief Range Officer is responsible for:

a) Fulfilling all technical and logistic issues with regard to preparation and proper conduct of a competition; and

b) Performing all duties listed below in close cooperation with the Technical Delegate, Jury, Organizing Committee, Chief of Referees, the Classification Office and other staff members.

EDITION 2017 | Second Print 01/2018
Copyright: ISSF

9.5.3.3 The duties of the Chief Range Officer are:

a) To give instruction and to supervise preparation of the shooting ranges according to technical and safety requirements as described in the ISSF Technical Rules, relevant to the Shotgun championships events;

b) To give instructions and supervise preparation of auxiliary facilities such as gun and ammunition storage, technical service, means of communication between the shooting ranges, technical personnel etc.;

c) To give direction and supervise the preparation of clay targets for training and competition;

d) To provide special ("Flash") targets filled with colored powder for the Finals and any shoot-offs in the Finals;

e) To ensure that the traps are adjusted according to the settings of the day;

f) To ensure that all necessary range systems are functioning properly;

g) To ensure that all range equipment is on each range and properly placed (large scoreboard, seats for Assistant Referees, facilities for the athletes, scorekeepers etc.);

h) To assist the Organizing Committee to prepare training shooting schedules as well as shooting programs for the competition;

i) To assist the Organizing Committee to prepare technical meetings for competition officials and team leaders;

j) To make decisions, with the approval of the Jury, regarding change of competition times and range allocations and interruption of the shooting on the ranges, for safety or other reasons; and

k) Instruct operating staff regarding the traps, release systems etc. with particular regard to safety.

9.5.4 Chief Of Referees

9.5.4.1 The Chief of Referees must be appointed by the Organizing Committee. He must possess an ISSF Shotgun Referee's license and must have a wide experience in Shotgun shooting, a thorough knowledge of shotguns and of the ISSF Rules applying to the competition.

Copyright: ISSF

9.5.4.2 The duties of the Chief of Referees, in general, are:

a) To assist the Organizing Committee in the selection and appointment of the Referees;

b) To supervise the Referees and Assistant Referees;

c) To give instruction and information to the Referees and Assistant Referees;

d) To prepare the schedules and assignments for the Referees;

e) To make decisions in cooperation with the Jury, such as when and on which ranges a athlete who had to leave his squad to repair a gun malfunction or was declared **"ABSENT"** may be permitted to complete his round; and

f) To keep the Chief Range Officer informed of any difficulties, failures etc. on the ranges;

9.5.5 Referees

9.5.5.1 Referees must be appointed by the Organizing Committee in co-operation with the Chief of Referees and must:

a) Possess an ISSF Shotgun Referee's license and a current Eyesight Certificate;

b) Have wide experience in Shotgun shooting; and

c) Have a thorough knowledge of Shotgun and ISSF Rules applying to the competition.

EDITION 2017 | Second Print 01/2018
Copyright: ISSF

9.5.5.2 The main functions of the Referee are:

a) To check that the correct squad of athletes is present on the range before the start of a round;

b) To ensure that the correct procedure is used to declare an athlete **"ABSENT"** (see **Rule 9.16.4.3 for "ABSENT" athlete**);

c) To make immediate decisions regarding **"HIT TARGETS"** (in all doubtful cases or a disagreement made by the athlete, the Referee **must** consult with the Assistant Referees before making a final decision);

d) To make immediate decisions regarding **"LOST TARGETS"** (the Referee must give a clear and distinct signal for all targets declared **"LOST"**);

e) To make immediate decisions regarding **"NO TARGETS AND IRREGULAR TARGETS"** (if possible, the Referee must call **"NO TARGET"** or give some signal before the athlete fires);

Note: Irregular targets require an immediate decision by the Referee.

f) To issue **Warnings (Yellow Card)** or automatic **Deductions (Green Card)** for rule violations where appropriate;

g) To ensure that the result of each shot is correctly recorded;

h) To ensure that the athletes are not disturbed;

i) To monitor illegal coaching (non-verbal coaching is allowed according to GTR 6.12.5.1);

j) To rule on any protests received from athletes;

k) To rule on disabled guns;

l) To rule on malfunctions;

m) To ensure the correct conduct of the round; and

n) To ensure the application of the safety rules.

9.5.5.3 Warnings Issued by the Referee

a) The Referee must give **Warnings** for rule violations (**Yellow Card**) and must note such warnings on the official range scorecard; but

b) The Referee may not assess penalties or disqualifications that fall under the responsibility of the Jury.

Copyright: ISSF

9.5.6 Assistant Referees

9.5.6.1 The Referee must be assisted by two (2) or three (3) Assistant Referees:

a) Who are usually appointed in rotation from among the athletes who fired in the previous squad;

b) All athletes must serve in this function when designated;

c) The Organizing Committee may provide substitute qualified Assistant Referees;

d) The Referee may accept experienced substitutes; and

e) A coach must not be a substitute if there is an athlete of the same nation in the squad.

9.5.6.2 The main duties of an Assistant Referee are:

a) To watch each target thrown;

b) To carefully observe whether a target is broken before the shot is fired;

c) To give, immediately after a shot, a signal to the Referee if he/she observes that in his/her opinion the target(s) is/are **"LOST;"**

d) If required, to mark the result of the Referee's decision regarding each shot on the official scorecard;

e) If asked, to advise the Referee on any other matters relating to the targets;

f) To be positioned in such a way that they can observe the whole unobstructed shooting area;

g) To indicate to the Referee in a Skeet event if the target is not hit within the boundaries; and

h) To advise the Jury in case of a protest.

9.5.6.3 Absent Designated Assistant Referee

If an athlete has been designated as an Assistant Referee and fails to present himself to give a plausible reason for refusing to serve or to provide an acceptable substitute, he must be penalized by the Jury by the deduction of one (1) point for each refusal, to be deducted from his last hit target in the last completed round.

Continued refusals may result in disqualification from the competition.

EDITION 2017 | Second Print 01/2018
Copyright: ISSF

9.5.6.4 Advising the Referee

The Referee must always make the final decision. If any Assistant Referee is in disagreement, it is his duty to advise the Referee by lifting an arm or otherwise attracting his attention. The Referee must then arrive at a final decision.

9.6 SHOOTING EVENTS AND COMPETITION PROCEDURES

9.6.1 Shotgun Events Are:

Trap Men and Trap Women

Double Trap Men And Double Trap Women

Skeet Men And Skeet Women

Trap Mixed Team

The programs for each event are:

EVENT	Number of Targets	
	Individual Men	Individual Women
Trap (in rounds of 25)	125 + Final	75 + Final
Double Trap (in 5 or 4 rounds of 30 targets each)	150 + Final	120
Skeet (in rounds of 25)	125 + Final	75 + Final

9.6.2 Training

9.6.2.1 Pre-Event Training

a) Must be provided for each event on the day before the start of the official competition on the same ranges and the same make and color of targets as are to be used in the official competition;

b) The Jury must check that the targets are set correctly for all Pre-Event Trainings;

c) All training times must be allocated fairly between those athletes present so that no advantage is given; and

d) For Skeet, two extra Doubles shall be provided (reverse Doubles on Stations 3 and 5 may be selected).

Copyright: ISSF

9.6.2.2 Unofficial Training

All range availability for unofficial training is the responsibility of the Organizing Committee, which must:

a) Ensure that unofficial training must not interfere with any scheduled competition events;

b) Be allocated fairly between those nations present so that no advantage is given; and

c) Ensure that all team leaders present are informed of any unofficial training schedules.

9.7 TARGETS – REGULAR, IRREGULAR, BROKEN, HIT, LOST AND NO TARGETS

9.7.1 Regular Target

a) A regular target is one (1) whole target called by the athlete and released according to the Rules; and

b) A regular Double is two (2) whole targets called by the athlete and released simultaneously according to the Rules.

9.7.2 Irregular Target

An irregular target is a target that is not thrown according to the Rules. An irregular Double occurs when;

a) One (1) or both of the targets are irregular;

b) The targets are not thrown simultaneously;

c) Only one (1) target emerges; or

d) Either target emerges “broken.”

9.7.3 Broken Target

a) A broken target is any target that is not whole in accordance with the General Specifications for Clay Targets (GTR 6.3.6.1); and

b) A broken target is a **“NO TARGET”** target and must always be repeated.

EDITION 2017 | Second Print 01/2018
Copyright: ISSF

9.7.4 “HIT” Target

a) A target is declared as **“HIT”** when a regular target is thrown and hit according to the event Rules and at least one (1) visible piece is broken from it;

b) A target that is only “dusted,” but from which no visible piece is seen, is not a **“HIT;”**

c) Where flash (powder filled) targets are used, a target must also be declared as **“HIT”** when there is visible emergence of powder after a shot is fired; and

d) All decisions regarding **“HIT,” “LOST,” “IRREGULAR”** or **“NO TARGET”** targets rest finally with the Referee.

Note: It is prohibited to pick up a clay target from the range to determine whether or not it was a **“HIT.”**

9.7.5 “LOST” Target(s)

A target(s), must be declared **“LOST”** when:

a) It is not hit during its flight within the shooting boundaries;

b) It is only dusted and no visible piece is broken from it;

c) The athlete does not fire at a regular target for which he has called and there is no mechanical or other external reason that has prevented the athlete from firing;

d) The athlete is not able to fire his gun for any reason attributable to the fault of the athlete;

e) The athlete is not able to fire because he has not released the “safety,” the “safety” has slipped to “safe” or he has forgotten to load;

f) In the case of a semi-automatic, the athlete has failed to release the stop on the magazine;

g) If after a malfunction the athlete has opened the gun or has touched the safety before the Referee has examined the gun; or

h) It is the third or subsequent malfunction in the same round.

Copyright: ISSF

9.7.6 “NO TARGETS”

a) A **“NO TARGET”** is irrelevant to the competition and must always be repeated;

b) The Referee must, if possible, call **“NO TARGET”** before the athlete fires, but if he calls **“NO TARGET”** after the athlete fires, a **“NO TARGET”** must be declared regardless of whether the targets were hit or not; and

c) After a **“NO TARGET”** is declared the athlete may open the gun and reposition himself.

9.8 COMPETITION RULES FOR TRAP

9.8.1 Conduct of a Round of Trap

Each squad member, with sufficient ammunition and all equipment necessary to complete the round, must occupy a shooting station in the order shown on the scorecard. The sixth athlete must stand in the marked area (Station 6) behind Station 1 ready to move to Station 1 as soon as the first athlete has shot at a regular target and the result is known. The Referee must take charge and when all preliminary procedures are completed (names, numbers, Assistants Referees, viewing of targets, test firing etc.) give the command **“START.”**

EDITION 2017 | Second Print 01/2018
Copyright: ISSF

9.8.2 Method

a) When the first athlete is ready to fire, he must raise the gun to the shoulder and call clearly for the target, after which the target must be thrown at once;

b) When the result of the shot(s) is known the second athlete must do likewise, followed by the third athlete and so on;

c) When the athlete has called for the target it must be released immediately, allowing only for human reaction time to press a button if the release is manual;

d) Two (2) shots may be fired at each target except that in Finals and any shoot-offs before or during Finals only one (1) shot may be fired. If an athlete fires two (2) shots, the target will be declare **"LOST"** whether it was hit or not by either of the shots;

e) After athlete No.1 has fired at a regular target, he must prepare to move to Station 2 as soon as the athlete on Station 2 has fired at a regular target; the other athletes in the squad must, on their stations, do likewise in rotation from left to right;

f) This whole sequence must continue until all athletes have each shot at 25 targets (2 left, 2 right and 1 center from each of the five stations);

g) Once the round has started an athlete may close the gun only after the previous athlete has completed his turn;

h) An athlete having shot must not leave the station before the athlete on the right has fired at a regular target and a result is registered, except when the athlete has completed shooting on Station 5; in this case he must proceed immediately to Station 6, being careful not to disturb the athletes who are on the line as he passes by;

i) All guns must be carried **OPEN** when moving between Stations 1 to 5 and **OPEN** and **UNLOADED** between 5 to 6 and 6 to 1;

j) Any athlete who loads his/her shotgun on Station 6 or carries his gun loaded between stations 5 and 6 must be given an initial **Warning (Yellow Card)**; any further occurrences in the same round will result in **Disqualification (Red Card)**; and

k) No athlete having shot on one (1) station may proceed towards the next station in such a way as to interfere with another athlete or match officials.

Copyright: ISSF

9.8.3 Preparation Time Limit

a) An athlete must take his/her position, close the gun and call for the target within twelve (12) seconds after the previous athlete has fired at a regular target and has opened the gun and the result is registered, or after the Referee has given the command **"START;"**

b) In case of non-compliance with this time limit, the penalties provided in the rules will be applied;

c) Where squads consist of five (5) or less athletes, preparation time must be extended to give the athlete leaving Station 5 sufficient additional time to arrive at Station 1; and

d) During Qualification Rounds, preparation time limits must be controlled by the Referee. During shoot-offs before Finals and during Finals, preparation time limits must be monitored by an electronic timing device (9.18.2.5) which must be managed by a Referee selected from among the appointed Competition Referees (9.18.2.6.b).

9.8.4 Interruptions

If a round of shooting is interrupted for more than five (5) minutes because of a technical malfunction that is not the fault of an athlete, the squad must be allowed to view one (1) regular target from each machine in the group on which the interruption occurred before the competition resumes.

If a technical malfunction requires a restart of the target sequencer, scoring must continue from the point where the malfunction or restart commences and no protest regarding the uneven distribution of targets will be considered.

9.8.5 Target Distances, Angles and Elevations

9.8.5.1 Trap Setting Table

Each trap machine must be set before the start of the competition each day to one (1) of the **Trap Setting Tables I - IX** drawn by lot, under the supervision of the Technical Delegate and Jury.

EDITION 2017 | Second Print 01/2018
Copyright: ISSF

9.8.5.2 Preferred Special Settings for the Trap Event

Two (2) Day Competition (75 + 50)		
	1st DAY	2nd DAY
	75 Targets	50 Targets
3 Ranges	3 settings (different setting for each range)	Changed - but same setting for all ranges
4 Ranges	Same setting for all ranges	Changed but same setting for ranges 1 and 3 and changed but same setting for ranges 2 and 4
or Two (2) Day Competition (50 + 75)		
	1st DAY	2nd DAY
	50 Targets	75 Targets
3 Ranges	Same setting for all ranges	Changed but different setting for each range
4 Ranges	Same setting for ranges 1 and 3 and different – but same setting for ranges 2 and 4	Changed but same setting for all ranges
Three (3) Day Competition (50 + 50 + 25)		

	1st DAY	2nd DAY	3rd DAY
	50 Targets	50 Targets	25 Targets
3 Ranges	Same setting for all ranges	3 settings (changed but different setting for each range)	
or			
3 Ranges	Same setting for all ranges	Changed – but same setting for all ranges	Changed – but same setting for all ranges
4 Ranges	Same setting for ranges 1 and 3 and different – but same setting for ranges 2 and 4	Changed – but same setting for all ranges	Changed – but same setting for all ranges
or			
4 Ranges	Different setting for each range		Changed – but same setting for all ranges
or Three (3) Day Competition (50 + 25 + 50)			
	1st DAY	2nd DAY	3rd DAY
	50 Targets	25 Targets	50 Targets
3 Ranges	3 settings (different setting for each range)		Changed – but same setting for all ranges
4 Ranges	Same setting for ranges 1 and 3 and different – but same setting for ranges 2 and 4	Changed - but same setting for all ranges	Changed – but same setting for ranges 1 and 3 and different – but same setting for ranges 2 and 4

Copyright: ISSF

or Three (3) Day Competition (25 + 50 + 50)			
	1st DAY	2nd DAY	3rd DAY
	25 Targets	50 Targets	50 Targets
3 Ranges	3 settings (different setting for each range)		Changed - but same setting for all ranges
4 Ranges	Same setting for all ranges	Changed – but same setting for ranges 1 and 3 and different – but same setting for ranges 2 and 4	Changed – but same setting for ranges 1 and 3 and different – but same setting for ranges 2 and 4
Two (2) or Three (3) DAY Competitions			
5 Ranges	5 settings (different setting for each range)		

If the above special settings are not used then the squads must be scheduled in such a way that, whenever possible, each squad should shoot:

a) The same number of times on each range in use;

b) The same number of times on a particular setting.

c) Whenever possible the settings used in Unofficial, Official or Pre-Event Training must be different from those used during the competition.

d) If the Organizing Committee together with the Jury decide that the Trap competition for any group of athletes (e.g.: men, women or juniors) is to be conducted on only one (1) separate range, the settings must be changed after all athletes in this group have completed fifty (50) targets (except in a World Cup Final competition).

9.8.5.3 Target Limits

Targets must be set according to the selected schemes in **Tables I – IX** (1-9) and within the following limits:

a) Height at 10 m -- 1.5 m to 3.0 m with a tolerance of +/- 0.15 m;

b) Angle -- maximum 45 degrees left or right; and

c) Distance -- 76.0 m +/- 1.0 m (as measured from the front edge of the pit roof).

EDITION 2017 | Second Print 01/2018
Copyright: ISSF

9.8.5.4 Trap Setting Procedure

Each machine must be set to throw the target as follows:

a) Adjust angle to the zero (0) degrees, straight forward position;

b) Adjust spring tension and height at 10 m forward of the front edge of the trap pit to obtain the required elevation and distance; and

c) Adjust to required angle as measured from a position immediately above the center of each machine, on the top of the trap pit roof.

9.8.6 Jury Checks

9.8.6.1 Trial Targets

a) Each range must be set before the start of the competition each day, these settings must be examined, approved and sealed by the Jury;

b) Each day, after the traps have been adjusted and approved by the Jury, one (1) trial target must be thrown from each machine, in sequence, before the start of the competition;

c) Trial targets may be observed by the athletes; and

d) All athletes, Coaches and Team Officials are prohibited from entering the trap pits after the Jury has examined and approved the trap settings (see 9.3).

9.8.6.2 Irregular Trajectory

Any target flying along a path other than that specified in angle, elevation or distance must be considered irregular.

9.8.7 Refused Target

An athlete may refuse a target if:

a) A target is not released immediately after the athlete's call;

b) The Referee agrees that the athlete, after calling for the target, was visibly disturbed by some external cause; or

c) The Referee agrees that the target was irregular.

Procedure by Athlete -- The athlete refusing a target must indicate this by opening the gun and raising an arm. The Referee must then give his decision.

Copyright: ISSF

9.8.8 “NO TARGET”

9.8.8.1 A **“NO TARGET”** target is one that is not thrown according to these Rules:

a) A **“NO TARGET”** decision is always the Referee's responsibility;

b) A target declared a **“NO TARGET”** by the Referee must always be repeated from the same trap (whether hit or not). However the athlete may not refuse it even if he considers that it was thrown from another machine in the same group; and

c) A Referee should attempt to call **“NO TARGET”** before the athlete fires. However, if the Referee calls **“NO TARGET”** as, or immediately after the athlete has fired, the Referee's decision must stand and the target must be repeated regardless of whether the target was “**HIT”** or not.

EDITION 2017 | Second Print 01/2018
Copyright: ISSF

9.8.8.2 A **“NO TARGET”** target must be declared even if the athlete has fired when:

a) A broken or irregular target emerges;

b) A target of a distinctly different color from that of the others being used in the Competition or Pre-Event Training is thrown;

c) Two (2) targets are thrown;

d) The target is thrown from a machine in another group;

e) An athlete shoots out of turn;

f) Another athlete fires at the same target;

g) The Referee is satisfied that the athlete, after calling for the target, was visibly disturbed by some external cause;

h) The Referee detects an initial violation of the athlete's foot position in a round;

i) The Referee detects an initial violation of the time limit;

j) The Referee, for any reason, cannot decide whether the target was **“HIT”** or not, (in such cases the Referee must always consult the Assistant Referees before announcing the decision);

k) The shot is discharged involuntarily before the athlete has called for the target. However, if the athlete then fires at the target with the second shot, the result must be scored. Also, the athlete must be warned and if the same situation occurs a second or subsequent time in a round, the target(s) shall be declared **“LOST”;** or

l) The first shot is a miss and the athlete's second shot misfires due to an allowable malfunction of either the gun or the cartridge. In this case the target must be repeated and **must be missed with the first shot** and hit only with the second shot. If the target is hit with the first shot, it must be declared **“LOST.”**

Copyright: ISSF

9.8.8.3 A **"NO TARGET"** target must be declared **provided that the Athlete has NOT fired** when:

a) A target is thrown before the athlete's call;

b) A target is not released immediately after the athlete's call (see **Note**);

c) A target's trajectory is irregular (see **Note**);

d) There is an allowable malfunction of gun or cartridge; or

e) The athlete's first shot misfires due to an allowable malfunction of either gun or cartridge and he does not fire the second shot; If the second shot was fired, the result of that shot must be scored.

Note: Unless the Referee calls **"NO TARGET"** before or immediately after the athlete fires, no claim for an irregular target must be permitted if the target was fired upon, when the irregularity claim is based solely upon an alleged "Quick Pull" or an alleged "Slow Pull" or a deviation from the prescribed lines of flight. Otherwise if the athlete fires the result must be recorded.

9.8.8.4 A target must be declared **"LOST"** when:

a) It is not hit during its flight;

b) It is only dusted and no visible piece is broken from it;

c) An athlete, for no permitted reason, does not shoot at a regular target for which he has called;

d) After a malfunction of gun or cartridge, an athlete opens the gun or moves the safety catch before the Referee has inspected the gun;

e) An athlete suffers a third or subsequent malfunction of gun or cartridge in the same round;

f) The first shot is a miss and the athlete fails to fire his second shot because he forgot to place a second cartridge in the gun, to release the stop on the magazine of a semi-automatic shotgun, or because the safety has slipped to the "safe" position by recoil of the first shot;

g) The athlete is not able to fire his gun because he has not released the safety or has forgotten to load;

h) The time limit is violated and the athlete has been warned once already **(Yellow Card)** in the same round (9.16.3.6); or

i) The athlete's foot position is violated and the athlete has been warned once already **(Yellow Card)** in the same round (9.16.3.6).

EDITION 2017 | Second Print 01/2018
Copyright: ISSF

9.9 COMPETITION RULES FOR DOUBLE TRAP

9.9.1 Conduct of a Round of Double Trap

a) Each squad member, with sufficient ammunition and all equipment necessary to complete the round, must occupy a shooting station in the order shown on the scorecard;

b) The sixth athlete must stand in the marked area behind Station 1 (Station 6) ready to move to Station 1 as soon as the first athlete has shot at a regular double and the results are known; and

c) The Referee must ensure that all preliminary procedures are completed (names, numbers, Assistants Referees, test firing, viewing of targets etc.) give the command **"START."**

Copyright: ISSF

9.9.2 Method

a) When the first athlete is ready to fire, he must raise the gun to the shoulder and call clearly for the double after which the double must be thrown immediately after the athlete‘s call.

b) When the result of the shots are known the second athlete must do likewise, followed by the third athlete and so on;

c) After the first athlete has fired at a regular double, he must prepare to move to Station 2 as soon as the athlete on Station 2 has fired at a regular double. The other athletes in the squad must, on their stations, do likewise in rotation from left to right;

d) This whole sequence must continue until all athletes have each shot at the required number of doubles;

e) Once the round has started an athlete may close the gun only after the previous athlete has completed his turn;

f) An athlete having shot, must not leave the station before the athlete on the right has fired at a regular double and the results are registered, except when the athlete has completed shooting on Station 5. In this case, he must proceed immediately to Station 6, being careful not to disturb the athletes who are on the line as he passes by;

g) All guns must be carried **OPEN** when moving between Stations 1 to 5 and **OPEN** and **UNLOADED** between 5 to 6 and 6 to 1.

h) Any athlete who loads his/her shotgun on Station 6 must be given an initial **Warning (Yellow Card)**; any further occurrences in the same round will result in **Disqualification**; and

i) No athlete having shot on one station may proceed towards the next station in such a way as to interfere with another athlete or match officials.

EDITION 2017 | Second Print 01/2018
Copyright: ISSF

9.9.3 Preparation Time Limit

a) An athlete must take his/her position, close the gun and call for the double within twelve (12) seconds after the previous athlete has fired at a regular double and has opened the gun and the result is registered, or after the Referee has given the command **"START;"**

b) In case of non-compliance with this time limit, the penalties provided in these rules will be applied;

c) Where squads consist of five (5) or less athletes, preparation time must be extended to give the athlete leaving Station 5 sufficient additional time to arrive at Station 1; and

d) Preparation time limits must be controlled by the Referee.

9.9.4 Interruption

If a round of shooting is interrupted for more than five (5) minutes because of a technical malfunction that is not the fault of an athlete, the squad must be allowed to view one (1) regular double from each scheme before the competition resumes.

9.9.5 Target Distances, Angles and Elevations

Double Trap Setting Table

Each trap machine must be set before the start of the competition each day according to the following Table:

Setting/ Scheme	Trap No.	Angle * (degrees)	Height at 10m (+/- 0.1m)	Distance (+/- 1m)
A	7 (1)	5 Left	3.00 m	**55.00 m** (as measured from the front edge of the pit roof)
	8 (2)	0	3.50 m	
B	8 (2)	0	3.50 m	
	9 (3)	5 Right	3.00 m	
C	7 (1)	5 Left	3.00 m	
	9 (3)	5 Right	3.00 m	

*** Note:**

The angles must be set with a tolerance of one (1) degree.

Target distribution must be random, but each athlete must receive one (1) scheme A double, one (1) scheme B double and one (1) scheme C double on each station sometime during each round.

Copyright: ISSF

9.9.6 Jury Check

Each range must be set before the start of the competition each day. These settings must be examined, approved and sealed by the Jury.

9.9.6.1 Trial Targets

a) Each day, after the traps have been adjusted and approved by the Jury, one (1) trial regular double must be thrown for each setting one (1) scheme A, one (1) scheme B and one (1) scheme C before each squad fires its first round for the day;

b) Trial targets may be observed by the athletes; and

c) All athletes, coaches and team officials are prohibited from entering the trap pits after the Jury has examined and approved the trap settings (see 9.3).

d) During competition, after a scheduled time break, one (1) trial regular double must be thrown for each setting, one (1) scheme A, one (1) scheme B and one (1) scheme C, before a squad fires.

9.9.6.2 Irregular trajectory

Any target flying along a path other than that specified in angle, elevation or distance must be considered irregular.

9.9.7 Refused Double

An athlete may refuse to shoot at a double if:

a) The double is not released immediately after the athlete's call;

b) The Referee agrees that the athlete, after calling for a double, was visibly disturbed by some external cause; or

c) The Referee agrees that either of the targets were irregular.

Procedure by Athlete -- The athlete refusing a target must indicate this by opening the gun and raising an arm. The Referee must then give his decision.

EDITION 2017 | Second Print 01/2018
Copyright: ISSF

9.9.8 “NO TARGET” Double

A **“NO TARGET”** double occurs when either or both targets are not thrown according to these Rules:

a) A **“NO TARGET”** decision is always the Referee's responsibility;

b) A double declared as a **“NO TARGET”** by the Referee must always be repeated whether either or both targets were HIT or not; and

c) A Referee should attempt to call **“NO TARGET”** double before the athlete fires. However, if the Referee calls **“NO TARGET”** as, or immediately after the athlete has fired, the Referee's decision must stand and the targets must be repeated regardless of whether either target of the double was **“HIT”** or not.

Copyright: ISSF

9.9.8.1 A **“NO TARGET”** Double must be declared even if the Athlete has fired when:

a) A broken or irregular target emerges;

b) A target of a distinctly different color from that of the others being used in the competition or Pre-Event Training is thrown;

c) Only one (1) target is thrown;

d) Both targets are not released simultaneously;

e) The targets collide;

f) Fragments from one (1) target break the other target;

g) The first shot breaks both targets;

h) An athlete shoots out of turn;

i) Another athlete fires at the same double;

j) Both shots are fired simultaneously (see Rule 9.12.2, “Number of Malfunctions Permitted”);

k) The Referee is satisfied that the athlete, after calling for the double was visibly disturbed by some external cause;

l) The Referee detects an initial violation of the athlete's foot position in a round;

m) The Referee detects an initial violation of the time limit;

n) The Referee, for any reason, cannot decide whether either target was **“HIT”** or not, (in such cases the Referee must always consult the Assistant Referees **before** announcing the decision); or

o) The first shot is a miss and the athlete's second shot misfires due to an allowable malfunction of either the gun or the cartridge. In this case the first target must be declared **“LOST”** and the double must be repeated to determine the result of the second shot only.

EDITION 2017 | Second Print 01/2018
Copyright: ISSF

9.9.8.2 A **"NO TARGET"** double must be declared, **provided that the Athlete has NOT fired** when:

a) The double is thrown before the athlete's call;

b) The double is not released immediately (see **Note below**);

c) Either target's trajectory is irregular (see **Note below**);

d) There is an allowable malfunction of gun or cartridge; or

e) The athlete's first shot misfires due to an allowable malfunction of either gun or cartridge and he does not fire the second shot. The double must be repeated to establish the result of both shots even if the second shot was fired.

Note: Unless the Referee calls **"NO TARGET"** before, as, or immediately after the athlete fires, no claim for an irregular target must be permitted if the target was fired upon, when the irregularity claim is based solely upon an alleged "Quick Pull" or an alleged "Slow Pull" or a deviation from the prescribed lines of flight. Otherwise if the athlete fires the result must be recorded.

9.9.8.3 A target must be declared **"LOST"** when:

a) It is not **"HIT"** during its flight;

b) It is only "dusted" and no visible piece is broken from it;

c) An athlete, for no permitted reason, does not shoot at a regular double for which he has called, the targets must be declared **"LOST"** and **"LOST;"**

d) An athlete, for no permitted reason, does not shoot a second shot, the result of the first shot must be recorded and the second target declared **"LOST;"**

e) The **first shot** is declared **"LOST"** and the athlete fails to fire his second shot because he forgot to place a second cartridge in the gun, to release the stop on the magazine of a semi-automatic shotgun, or because the safety has slipped to the safe position by recoil of the first shot the targets must be declared **"LOST"** and **"LOST;"**

f) The athlete is not able to fire his gun because he has not released the safety or has forgotten to load, the targets must be declared **"LOST"** and **"LOST;"**

g) The time limit is violated and the athlete has been warned once already **(Yellow Card)** in the same round the targets must be declared **"LOST"** and **"LOST"** (9.16.3.6); or

h) The athlete's foot position is violated and the athlete has been warned once already **(Yellow Card)** in the same round the targets must be declared **"LOST"** and **"LOST"** (9.16.3.6).

Copyright: ISSF

9.9.8.4 Result in the case of a Malfunction:

a) The athlete shoots at the first target but an allowable malfunction prevents the firing of a second shot, the result of the first shot must be recorded and the double repeated to determine the result of the second shot only;

b) After a malfunction of gun or cartridge, the athlete is unable to fire a **first shot** and he opens the gun or touches the safety catch before the Referee has inspected the gun, the targets must be declared **"LOST"** and **"LOST;"**

c) After a malfunction of gun or cartridge, the athlete is unable to fire a **second shot** and he opens the gun or touches the safety catch before the Referee has inspected the gun, the result of the first shot must be recorded and the second target must be declared **"LOST;"**

d) An athlete suffers a third or subsequent malfunction of gun or cartridge in the same round on the **first shot** the targets must be declared **"LOST"** and **"LOST;"**or

e) An athlete suffers a third or subsequent malfunction of gun or cartridge in the same round on the **second shot**, the result of the first shot must be recorded and the second target must be declared **"LOST;**"

9.9.8.5 Result in the event of an Involuntary Discharge when:

a) A shot is discharged involuntarily before the athlete calls, the Referee must declare **"NO TARGET"** and warn the athlete; however, if the same situation occurs for a second or subsequent time in a round, both targets shall be declared **"LOST;"**

b) A shot is discharged involuntarily **after the athlete calls,** but **before the targets appear,** and he shoots a second shot, the first target must be declared **"LOST"** and the second target must be scored according to the result of the second shot. However, an athlete is permitted only one (1) occurrence in the same round. If the same situation occurs for a second or subsequent time both targets must be declared **"LOST;"**

c) A shot is discharged involuntarily **after the athlete calls** but **before the targets appear** and he does not shoot a second shot, the first target must be declared **"LOST"** and the double must be repeated to determine the result of the second shot only; or

d) However, an athlete is permitted only one (1) occurrence in the same round. If the same situation occurs for a second or subsequent time both targets must be declared **"LOST;"**

EDITION 2017 | Second Print 01/2018
Copyright: ISSF

9.9.9 Shooting into the Ground

An athlete who shoots into the ground must receive an initial **Warning (Yellow Card)**. For a repetition in the same round, both targets must be declared **"LOST"** whether hit or not.

9.10 COMPETITION RULES FOR SKEET

9.10.1 Conduct of a Round of Skeet

The squad must assemble on the range in an area next to Station 1, with sufficient ammunition and all equipment necessary to complete the round.

The Referee must take charge and when all preliminary procedures are completed (names, numbers, Assistant Referees, test firing, trial of targets, etc.) give the command **"START."**

Copyright: ISSF

9.10.2 Method

After the command **"START"** is given:

a) The first athlete must move onto Station 1, load the gun with one (1) cartridge only, adopt the READY position and call for the target, after which a regular target from the high house must be thrown within an indefinite period varying randomly from zero (0) to a maximum of three (3) seconds;

Note: If an electronic-microphone system is used, it must be constructed so as to randomly insert a delay varying from 0.2 to 3.0 seconds.

b) When the result of the shot is known, the first athlete shall remain on the station, load with two (2) cartridges, adopt the READY position, and call and fire at a regular double;

c) When the results of both shots are known the first athlete must leave the station;

d) The second athlete must then do likewise, followed by the third athlete and so on until all the members of the squad have each shot the required sequence on Station 1;

e) The first athlete must then move onto Station 2 and shoot the required number of targets in the required sequence and time, followed in turn by each member of the squad;

f) This rotation will continue until all the required stations have been shot by all members of the squad;

g) No athlete in the squad may advance to the station before his shooting turn, before the Referee's order to shoot or before the previous athlete has completed his shooting and has left the station; and

h) No athlete having shot on one (1) station may proceed towards the next station until all the members of the squad have completed their shooting on the station or in such a way as to interfere with another athlete or impede the duties of the match officials.

EDITION 2017 | Second Print 01/2018
Copyright: ISSF

9.10.3 Competition Procedures

9.10.3.1 **Preparation Time Limits.** Athletes must call for and fire at their targets according to the following time limits:

a) After the Referee has given the signal to **"START"** or after the previous athlete has left the station, the next athlete must occupy the station within ten (10) seconds;

b) The athlete must stand with both feet entirely within the station boundaries, take his position, load the gun, adopt the READY position and call for the target(s) in the required sequence for the station;

c) The athlete must then call for the next single or double to be fired at from that station within the shortest time possible;

d) The maximum total time allowed to call for the required sequence for that station is thirty (30) seconds in both Qualification Rounds and Finals after the athlete has occupied the station; and

e) During Qualification Rounds, preparation time limits must be controlled by the Referee. During shoot-offs before Finals and during Finals, preparation time limits must be controlled with an electronic timing device (9.18.2.5) managed by the appointed Referee.

Copyright: ISSF

9.10.3.2 Target Shooting Sequence for Qualification Rounds

Only one (1) shot may be fired at each target.

STATION	TARGET	ORDER
1	Single	High
	Double	High – Low
2	Single	High
	Double	High – Low
3	Single	High
	Double	High – Low
4	Single	High
	Single	Low
5	Single	Low
	Double	Low – High
6	Single	Low
	Double	Low – High
7	Double	Low - High
4	Double	High – Low
	Double	Low – High
8	Single	High
	Single	Low

EDITION 2017 | Second Print 01/2018
Copyright: ISSF

9.10.3.3 Special Procedures for Station 8:

When the squad advances to Station 8, they must stand in their shooting order **behind the Referee** who should be positioned approximately five (5) meters from Station 8 on an imaginary line drawn between the centers of Station 8 and Station 4.

After the Referee has declared **"START"** each athlete in turn must:

a) Take position for the high house target;

b) Load the gun with one (1) cartridge only;

c) Adopt the READY position;

d) Call for the target; and

e) Shoot at the high house target.

Then turn clockwise (to the right, in the direction of the target crossing post):

f) Take position for the low house target;

g) Load the gun with one (1) cartridge only;

h) Adopt the READY position;

i) Call for the target;

j) Shoot at the low house target; and

k) When the result of this last shot is known, the athlete must leave the station and move to the rear of the line of the athletes who have still to shoot. Each athlete must do the same in succession.

Copyright: ISSF

9.10.3.4 Cartridge Loading Sequence

a) On Station 8 for both the high and low house targets, the gun must be loaded with one (1) cartridge only;

b) On Station 4 where two (2) single targets are to be shot, two (2) cartridges must be loaded before calling for the first single target;

c) In case an athlete forgets to load the second barrel in singles on Station 4 where two (2) single targets are to be shot, and after calling for or shooting at the first target remembers and either opens his gun to load or he raises his hand to ask permission of the Referee to load his gun, the target will be declared **"LOST;"**

d) When shooting is interrupted, the gun must be opened and be made empty; and

e) No athlete may turn from the shooting station before his gun is open and empty.

9.10.3.5 Trial Targets

A regular target from each of the high and low houses may be seen by the squad:

a) From Station 1 immediately prior to the start of their first round on each day of competition;

b) If the Referee declares **"NO TARGET,"** the athlete may ask to have one (1) trial target thrown after each irregular target, or one (1) trial double thrown after an irregular double, provided the irregular target was not fired upon or both targets of an irregular double were not fired upon; and

c) If a round of shooting is interrupted for more than five (5) minutes because of a technical malfunction that is not the fault of an athlete, before the competition resumes the squad must be allowed to view one (1) regular target from each trap.

EDITION 2017 | Second Print 01/2018
Copyright: ISSF

9.10.3.6 Sighting On the Ranges

Aiming and sighting exercises:

a) May be conducted after the Referee has ordered **"START"** only on **Station 1**. The athlete is permitted (within the allowable time limit) after loading and before shooting to raise the gun to the shoulder and sight for a few seconds for both the single target and the double;

b) The athlete must then adopt the READY position before calling for the target(s); and

c) Prior to the start of the round an athlete is not permitted to make any aiming or sighting exercises with or without the gun on any other station, but during the round, athletes who are not shooting may, without disturbing the other athletes or the Referee, use their hand to track targets while another athlete is shooting.

9.10.3.7 Target Distances and Elevations (see GTR 6.4.20.2)

a) Skeet traps must be set before the start of the competition according to the specifications. (In calm weather conditions targets must carry a distance of 68.00 m +/- 1.00 m as measured from the face of the house behind Stations 1 and 7). The settings must be examined, approved and sealed by the Jury prior to each day of competition.

b) All athletes, coaches and team officials are prohibited from entering the Skeet houses after the Jury has examined and approved the trap settings (see 9.3).

9.10.3.8 Irregular Trajectory

Any target flying along a path other than specified in angle, elevation or distance must be considered irregular.

Copyright: ISSF

9.10.3.9 READY Position

At the moment the athlete calls and until the target (s) appears, the athlete must stand in the READY position with:

a) Both feet entirely within the shooting station boundaries;

b) Holding the gun with both hands;

c) The gun stock in contact with body; and

d) The toe of the stock on or below the ISSF official marker tape and clearly visible to the Referee standing in the correct position.

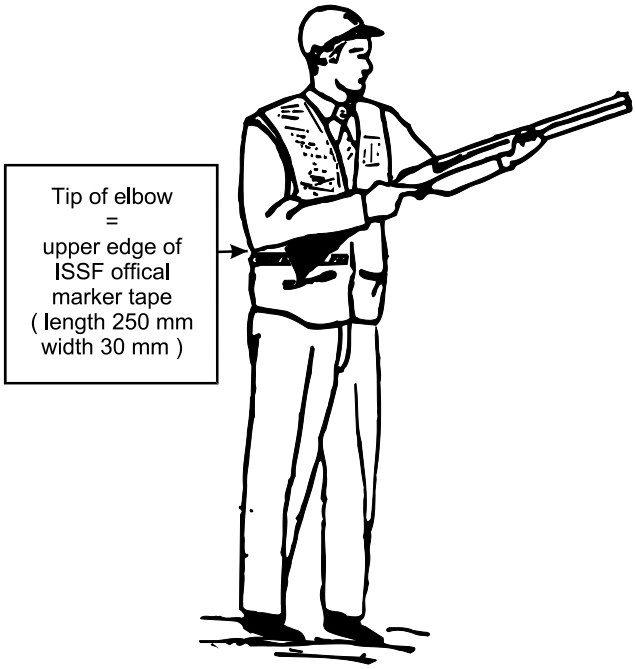

9.10.4 Marker Tape

To aid the Referee in controlling the position of the gun **the ISSF official marker tape** must be permanently affixed to the shooting vest (outer garment).

9.10.4.1 The ISSF official marker tape must be:

a) 250mm long, 30mm wide, yellow in color with a black border and bearing the ISSF logo; and

b) Permanently affixed to the appropriate side of the shooting vest.

EDITION 2017 | Second Print 01/2018
Copyright: ISSF

9.10.4.2 Marker Tape Check

Athletes are responsible for ensuring that the marker tape is correctly positioned as per 9.10.4.3 below. The Jury will provide an equipment control consultation service that is available to all athletes starting on the first Pre-Event Training day so that athletes, if they wish, may have their equipment checked prior to the competition. To ensure compliance with ISSF Rules, the Jury will conduct random checks during Competition and any athlete found to be in violation of the rules must be disqualified (see 9.4.1.1).

9.10.4.3 The correct position of the marker tape must be checked as follows:

a) All pockets of the shooting vest must be empty;

b) The athlete must stand straight (erect) while holding the right arm (right-handed shooter) in a right angle position on the side of the body with the lower arm horizontal and the upper arm vertical. The right angle position of the shooting arm will then be fixed with the use of a special accessory (see illustration);

c) The Jury member will then project a horizontal laser beam onto the marker tape to show the location of the point of the elbow in relation to the tape;

d) The laser beam must project onto the top half of the marker tape or higher to be legal;

e) An ISSF seal must then be placed on either end of the marker tape;

f) All illegal markers will be required to be properly positioned and subjected to re-check before the athlete is permitted to compete; and

g) Shooting vests must not be constructed with any item (tape, drawstring, elastic band, etc.) that could be used to adjust the fit of the jacket.

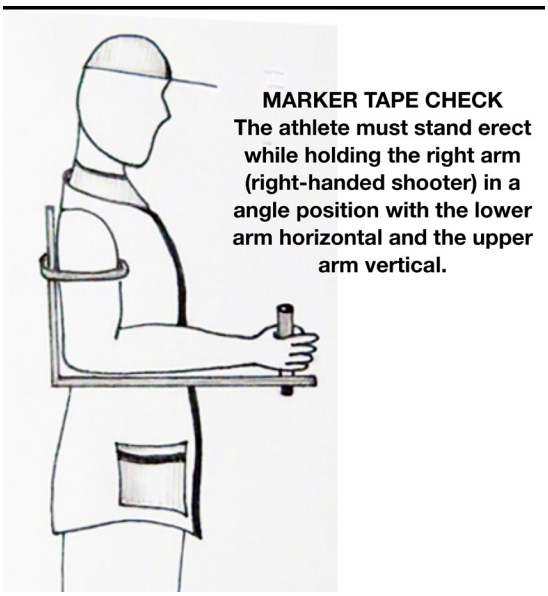

Copyright: ISSF

9.10.5 Refused Target

An athlete may refuse a target if:

a) A target is not released within the proper time;

b) In a “Double” the targets are not released simultaneously;

c) The Referee agrees that the athlete, after calling for the target(s), was visibly disturbed by some external cause; or

d) The Referee agrees that a target was irregular because of a faulty trajectory.

Procedure by the athlete -- The athlete refusing a target must indicate this by opening the gun and raising an arm. The Referee must then give his decision.

9.10.6 “NO TARGET”

a) A **“NO TARGET”** target is a target that is not thrown according to these Rules;

b) The **“NO TARGET”** decision is always the Referee's responsibility;

c) A target declared **“NO TARGET”** by the Referee must always be repeated whether hit or not; and

d) The Referee should attempt to call **“NO TARGET”** before the athlete fires. However, if the Referee calls **“NO TARGET”** as or immediately after the athlete fires, the Referee's decision must stand and the target(s) must be repeated regardless of whether they were **“HIT”** or not.

EDITION 2017 | Second Print 01/2018
Copyright: ISSF

9.10.6.1 A **“NO TARGET”** or **“NO TARGETS”** must be declared even if the athlete has fired when:

a) A broken target emerges;

b) A target of distinctly different external color from that of the others being used in the competition or Pre-Event Training is thrown;

c) Two (2) targets are thrown in singles;

d) A target is thrown from the wrong trap house;

e) The athlete's READY position is incorrect and the athlete has not received a previous warning in that round;

f) The Referee detects an initial violation of the time limit;

g) The Referee detects an initial violation of the athlete's foot position in a round;

h) The Referee is satisfied that the athlete was visibly disturbed by some external cause, after calling for the target(s);

i) The Referee for some reason, cannot decide whether the target was **“HIT,” “LOST”** or **“NO TARGET.”** In this case the Referee must always consult the Assistant Referee before making a final decision;

j) An athlete has an allowable malfunction of gun or cartridge; or

k) A shot is discharged involuntarily before the athlete calls, the Referee must warn the athlete; however, if the same situation occurs for a second or subsequent time in a round, the target(s) shall be declared “**LOST.”**

9.10.6.2 A **“NO TARGET”** must be declared provided the athlete has **NOT** fired when:

a) A target is thrown before the athlete's call;

b) A target is thrown after a period exceeding three (3) seconds;

c) A target's trajectory is irregular; or

d) There is an allowable malfunction of gun or cartridge.

Copyright: ISSF

9.10.6.3 Additional **"NO TARGET"** Rules applying to Doubles

Both targets must be declared **"NO TARGET"** and a repeat Double thrown, to determine the result of both shots when:

a) Either target is irregular (see note);

b) A single target is thrown in doubles;

c) The first shot breaks both targets (an athlete is permitted only two (2) attempts on any one station, if the same situation occurs for the third time the first target must be declared a **"HIT"** and the second **"LOST"**);

d) Fragments from the first target break the second target;

e) The targets collide;

f) The athlete suffers an allowable malfunction of gun or cartridge and is unable to fire the first shot; or

g) Both shots are fired simultaneously.

Note: Unless the Referee calls **"NO TARGET(s)"** before or immediately after the athlete fires, no claim for an irregular target or targets must be permitted if either target was fired upon, when the irregularity claim is based solely upon an alleged "Quick Pull," an alleged "Slow Pull" or a deviation from the prescribed lines of flight. Otherwise if the athlete fires the result(s) must be recorded.

9.10.7 Shooting Out of Turn

If an athlete inadvertently shoots out of turn, the result of the shot(s) must be recorded and the athlete given an official **Warning (Yellow Card)**. Any repetition in the same round must result in the target(s) shot at being declared **"LOST"** and the matter referred to the Jury. The athlete may be **Disqualified (Red Card)**.

EDITION 2017 | Second Print 01/2018
Copyright: ISSF

9.10.8 Lost Target

A target(s) must also be declared **"LOST"** when:

a) It is not **"HIT;"**

b) It is **"HIT"** outside the boundaries;

c) It is only "dusted" and no visible piece is broken from it;

d) An athlete, for no permitted reason, does not shoot at a regular target for which he has called;

e) The athlete is unable to fire his gun because he has not released the safety or has forgotten to load;

f) After a malfunction of gun or cartridge, an athlete opens the gun or touches the safety catch before the Referee has inspected the gun;

g) An athlete suffers a third or subsequent malfunction in the same round;

h) An athlete's READY position is not according to the rules and the athlete has been warned once already **(Yellow Card)** in the same round (9.16.3.6);

i) The athlete's foot position is violated and the athlete has been warned once already **(Yellow Card)** in the same round (9.16.3.6);

j) The time limit is violated and the athlete has been warned once already **(Yellow Card)** in the same round (9.16.3.6); or

k) In singles, a shot is discharged involuntarily **after the athlete has called** for the target, but before the target appears. The athlete must be warned **(Yellow Card)**. The target must also be declared **"LOST"** for the second or any subsequent involuntary discharge in the same round.

Copyright: ISSF

9.10.9 Additional "LOST" Target Rule Applying to Doubles

In addition the following must also apply in the case of doubles:

a) When an athlete for no permitted reason fails to fire at the **first target** of a regular double for which he has called the targets must be declared **"LOST"** and **"LOST;"**

b) When an athlete for no permitted reason fails to fire at the **second target** of a regular double for which he has called the first target must be recorded according to the result and the second target must be declared **"LOST;"**

c) An athlete misses the first target of the double and **accidentally hits the second target** with the same shot; the first target shall be declared **"LOST"** and the double repeated to determine the result of the second shot only. The athlete must always shoot at both targets in the repeated double(s);

d) A shot is discharged **involuntarily after** the athlete has called, but **before** the targets appear, the first target must be declared **"LOST"** and the double must be repeated to determine the result of the second shot only. The athlete must shoot at both targets in the repeated double;

e) For a second or subsequent involuntary discharge in the same round the targets must be declared **"LOST"** and **"LOST"** and the Referee must issue a **Warning (Yellow Card)**;

f) If an athlete **misses** the first target in a double and has an allowable malfunction on the second shot, the first target must be declared **"LOST"** and the double repeated to establish the result of the second shot only. The athlete must shoot at both targets in the repeated double;

g) If the athlete **breaks** the first target in a double and has an allowable malfunction on the second shot, the first shot must be declared **"HIT"** and the double repeated to establish the result of the second shot only. The athlete must shoot at both targets in the repeated double; or

h) If the targets of a regular double are shot in reverse order, both of them must be declared **"LOST."**

EDITION 2017 | Second Print 01/2018
Copyright: ISSF

9.11 COMPETITION ADMINISTRATION

9.11.1 Shooting Schedules

a) Athletes and team officials must be informed of the exact start time, the squad and range schedules and allocated positions within the squads no later than two (2) hours after the Technical Meeting on the day preceding the competition;

b) Athletes and Team Leaders must be informed of the range schedules for the Pre-Event Training by 18:00 hours on the day before; and

c) If it becomes necessary to change any of the shooting schedules for any reason, the Team Leaders must be informed immediately by posting the new schedules on the Main Notice Board and Shotgun Range Scoreboard and distributing them to all participating teams.

9.11.2 Replacement of an Athlete

If an athlete has fired a shot in the competition and must withdraw, he may not be replaced. This rule will also apply for competitions composed of several parts or carried out over several days.

9.11.3 Program Interruptions

Once shooting has started it must continue without interruption according to the program, except for safety reasons, mechanical breakdowns, poor lighting conditions, extreme weather conditions, or other enforced delays in the program that would seriously affect the quality of competition. Only the Chief Range Officer may interrupt the shooting, with the Jury's approval, in the event of heavy rain, storm or lightning.

9.11.4 Squadding

9.11.4.1 Squad Composition

a) A squad must be composed of six (6) members except when the drawing does not permit a totally even distribution; and

b) Squads of **less than five (5) are not permitted** except when an athlete is declared **"ABSENT"** at the commencement of a round or an athlete has to leave a round for any reason.

Copyright: ISSF

9.11.4.2 Auxiliary Athletes (Fillers)

The Organizing Committee should have available proficient athletes who may be required to act as auxiliary athletes:

a) If the squad consists of less than five (5) members drawn by lot, it should be filled with non-competing athletes of a proficient standard;

b) The Organizing Committee may, with the approval of the Technical Delegate, also use auxiliary athletes (fillers) to fill squads with only five (5) members; and

c) These auxiliary athletes should have their scores posted in the normal manner on the official scorecard in order to provide continuity. However, their names and nationality must not be listed.

9.11.4.3 Squadding Draw

a) The drawing for the Qualification Rounds must be made so that the athletes of each country are distributed in such a way that no squad will contain more than one (1) athlete from each nation (except the World Cup Final and Olympic Games if necessary);

b) The allocation of athletes to the squads and positions within the squads must be done by the drawing of lots under the supervision of the Technical Delegate(s). This may be done with a computer program suited for this purpose; and

c) The random selection of ranges and the division of the rounds must be made under the supervision of the Technical Delegate(s).

9.11.4.4 Squad Adjustments

The Jury, in conjunction with the Organizing Committee, and with the approval of the Technical Delegate(s), may adjust the draw, but only to ensure that the requirements of the Squadding Draw (9.11.4.3) are met.

9.11.4.5 Shooting Order

The shooting order of the squads and the shooting order within the squads must also be changed from day to day by the Organizing Committee under the supervision of the Jury. This can be by either having the squads and the members of each squad shoot in reverse order or by splitting the squads in a manner agreed by the Jury. In the case of a one (1) day competition, the shooting order within the squads may, with the permission of the Jury, be changed from round to round.

EDITION 2017 | Second Print 01/2018
Copyright: ISSF

9.12 MALFUNCTIONS

9.12.1 Malfunction Definition

Failure of a properly loaded gun to fire when the trigger is pulled (mechanical failure or misfire), or a defective cartridge that does not deliver its full load when the primer was struck, or when a single pull of the trigger or the involuntary operation of both triggers on a double trigger gun produces a simultaneous discharge, must be recorded as a malfunction.

9.12.2 Number of Malfunctions Permitted

The athlete is permitted a maximum of two (2) malfunctions per round, whether or not he has changed his gun or ammunition.

a) All regular target(s) on which any additional malfunction of gun or ammunition occurs in the same round will be declared **"LOST"** whether or not the athlete attempted to fire; and

b) If after a malfunction, the Referee agrees with the athlete that the gun is in need of repair, then action may be taken in accordance with the Rules for Disabled Shotguns (see 9.12.6).

9.12.3 Barrel Selection

Where an athlete is using a double-barreled shotgun, it will be assumed that the athlete is firing the bottom barrel first (or right hand barrel, in the case of a side–by–side), unless the athlete indicates to the Referee **before** each of his rounds that he intends otherwise.

9.12.4 Procedure in the Event of a Malfunction

Decisions on malfunctions of either gun or cartridge must be made by the Referee.

9.12.4.1 In the event of misfire due to any reason, the athlete must:

a) Keep the gun pointed at the target flight area;

b) Not open the gun;

c) Not touch the safety catch;

d) Hand the gun safely to the Referee for examination if asked; and

e) Answer any questions from the Referee.

Note: The athlete is responsible for checking the gun after it is returned by the Referee.

Copyright: ISSF

9.12.4.2 The following are **not considered malfunctions:**

a) Faulty manipulation of the mechanism by the athlete;

b) Failure to place a cartridge in the correct chamber of the gun; or

c) Any fault attributable to the athlete.

9.12.4.3 Ammunition Malfunctions (Misfires)

Decisions on ammunition malfunctions must be made by the Referee. The following are considered ammunition malfunctions when the **firing pin indentation** is clearly noticeable and:

a) The powder charge is not ignited;

b) Only the primer fires;

c) The powder charge is omitted; or

d) Some components of the load remain in the barrel.

Cartridges of the wrong size must **not** be considered as defective ammunition. (Placing a 20 or 16 gauge cartridge into a 12 gauge gun is dangerous and may also subject the individual to penalties for unsafe gun handling).

9.12.5 Actions after Malfunctions are Declared

9.12.5.1 If the Referee decides that the disabled gun or that the malfunctioning of the gun or ammunition is not the fault of the athlete, and that the gun is not repairable quickly enough, the athlete may use another gun if it can be obtained within three (3) minutes after the gun has been declared **"DISABLED."**

OR

9.12.5.2 The athlete may after obtaining the permission of the Referee, leave the squad and finish the remaining targets of the round at a time to be determined by the Chief of Referees.

EDITION 2017 | Second Print 01/2018
Copyright: ISSF

9.12.6 Disabled Shotguns

Decisions on disabled shotguns must be made by the Referee.

A shotgun may be considered disabled if**:**

a) It cannot be fired;

b) The athlete having already suffered two (2) malfunctions of either gun or ammunition in a round obtains permission from the Referee to change it;

c) It fails to eject due to mechanical defect; or

d) For any other reason that renders the gun unusable.

9.12.7 Procedures for Completing a Make-Up Round

9.12.7.1 Trap

The athlete having been allocated a time and Range having the correct scheme, must stand **behind the station to be shot** and be shown all three (3) targets from that group, after which the Referee must give the command **"START."** The athlete must then move onto the station and shoot in the normal manner. After which he must shoot from the remaining stations in order to complete the round.

9.12.7.2 Double Trap

The athlete having been allocated a time and Range must stand **behind the station to be shot** and there be permitted to view regular doubles scheme A, scheme B and scheme C, after which the Referee must give the command **"START."** The athlete must then move on to the station and shoot in the normal manner at a Double. After which he must shoot from the remaining stations in order to complete the round.

9.12.7.3 Skeet

The athlete having been allocated a Range and time, must stand **behind the station to be shot** and there he will be permitted to view a regular high and low house target, the Referee must then give the command **"START."** The athlete must then move on to the station and shoot in the normal manner at the required number of targets. After which he must shoot from the remaining stations in order to complete the round.

9.12.8 Make-Up Round (Score Certification)

The Referee must then ensure that the scores from the make up round and the original interrupted round are correctly totalled, signed by the athlete and the Referee, before the card is taken to the RTS Office.

Copyright: ISSF

9.13 COMPETITION CLOTHING AND EQUIPMENT

See also GTR 6.7.

9.13.1 Athletes' Clothing (See aslo GTR 6.19, The ISSF Dress Code)

a) Sports trousers, training (athletic warmup) trousers and jackets, for men and women and similar sports blouses, skirts/dresses for women are allowed. Blue jeans, jeans or similar trousers are prohibited;

b) Open toe or open heeled shoes, sandals or any other similar footwear are not allowed;

c) Shorts or skirts with the bottom of the leg not more than 15 cm above the center of the knee cap are allowed;

d) Shirts, T-shirts and similar garments with sleeves less than 10 cm in length or without sleeves are not allowed; and

e) Clothing made of camouflage material is prohibited.

9.13.2 Bib (Start) Numbers

Bib (Start) Numbers must be worn by all athletes:

a) On their backs and above the waist;

b) At all times while participating in Pre-Event Training and in competition;

c) If the Bib Number is not worn, the athlete may not start or continue; and

d) the Bib Number must display the allocated number as large as possible but should not be less than 20 mm high.

9.13.3 National IOC Identity

The IOC abbreviation of the nation of the athlete and the athlete's family name and first initial must be displayed in Latin letters (IOC abbreviation at the top) on the back of the shoulder area of the outer shooting garment and above the Bib Number). The national flag may be displayed on the left side of the IOC nation abbreviation.

EDITION 2017 | Second Print 01/2018
Copyright: ISSF

9.13.4 Blinders

Side blinders (on one or both sides) attached to the hat, cap, shooting glasses or to a headband, not exceeding 60 mm in deep are permitted for Shotgun athletes only (Rule 9.13.4). The front edge of a side blinder, when viewed from the side, must not extend more than 30 mm forward of the center point of the forehead. Side blinders must be made of plastic material only. A front blinder not exceeding 30 mm in width is permitted.

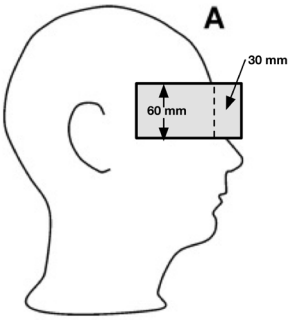

9.14 RESULTS, TIMING AND SCORING (RTS) PROCEDURES

The Jury Member responsible for shotgun results, timing and scoring procedures will either be appointed from among the appointed Jury Members by the ISSF or by the Technical Delegate in cooperation with the Shotgun Jury Chairman.

9.14.1 RTS Office

9.14.1.1 It is the duty of the RTS Office BEFORE the competition to:

a) Prepare score cards for each squad; and

b) Ensure that the correct score card is with the correct squad on the correct range.

9.14.1.2 It is the duty of the RTS Office AFTER each round to:

a) Receive and check the totals of the targets hit and verify results;

b) Record scores;

c) Post preliminary scores on the range bulletin board immediately; and

d) If any result is outstanding because of a protest, such scores must be omitted for the time being and the remaining scores posted.

Copyright: ISSF

9.14.1.3 It is the duty of the RTS Office at the CONCLUSION of each shooting day to:

a) Total the official scores within the shortest possible time;

b) Prepare accurate Preliminary Results for distribution to the press, team officials, Jury and Technical Delegate(s);

c) Prepare and publish accurate Final Results immediately;

d) Publish correct Final Results containing the full family name, full first name (without abbreviations), Bib Numbers and IOC abbreviations of each athlete's nation as soon as possible after the close of any applicable protest period; and

e) The Organizing Committee must retain the range scorecards, which show the results of every target shot at, for a minimum of 12 months after the conclusion of the competition.

9.14.2 Scoring Procedure

Scoring is done officially on each range for each round of 25 targets in Trap and Skeet or 15 doubles in Double Trap events:

a) In all ISSF Championships, individual scores must be kept on each range by two (2) separate persons, these are usually Assistant Referees;

b) One person must maintain a permanent official scorecard; and

c) The second person must maintain a manual scoreboard, except that where an electronic scoreboard is used, it must be maintained by the Referee.

9.14.3 Scoreboards

9.14.3.1 Ranges with Electronic Scoreboards

The Referee must control the operation of the electronic scoreboard and ensure that the results are correctly registered.

9.14.3.2 Two (2) persons must be appointed as Assistant Referees as follows:

a) The first person must be positioned at the side of the firing line to function as an Assistant Referee and maintain a permanent official scorecard;

b) The second person must be positioned at the other side of the firing line to function as an Assistant Referee; and

c) A third person may be appointed to maintain the official scorecard and, in this case, the other two persons will function only as Assistant Referees.

EDITION 2017 | Second Print 01/2018
Copyright: ISSF

9.14.3.3 Visible Scoreboard Errors

If at any stage the visible scoreboard should display an incorrect score, the Referee must immediately stop the shooting and with minimum delay take whatever action is required to correct it. If for any reason, it is not possible to correct the display, the following action will be taken:

a) The official scoreboard must be examined and verified up to the point where the electronic scoreboard failed;

b) Then, if possible to substitute quickly a manual scoreboard, enter the scores upon it up to the point of failure and continue the round;

c) If it is not possible to substitute a manual scoreboard, an additional scorecard must be introduced, the verified scores entered upon it and the round must then continue with the second scorecard under the control of a qualified person appointed by the Chief of Referees; and

d) In the event that there is a difference in the recorded scores between the two (2) scorecards, that which is under the control of the official appointed by the Chief of Referees, must prevail.

9.14.3.4 Ranges with Manual Scoreboards

Three (3) persons must be appointed as Assistant Referees, as follows:

a) The first person must be positioned on the left or right side of the range to act as an Assistant Referee and also maintain the manual scoreboard;

b) The second person must be positioned on the opposite side and act as an Assistant Referee.;

c) The third person must be positioned at the rear of the firing line to maintain a permanent official scorecard and also to check that the scores shown on the manual scoreboard are registered correctly;

d) Each scorer must mark the card or board independently but based only on the decision given by the Referee;

e) At the conclusion of each round the results must be compared and the correct scores entered upon the official scorecard before it is delivered to the RTS Office; and

f) The scores shown on the manual scoreboard must prevail if there are unresolved differences.

Copyright: ISSF

9.14.4 Score Certification

When a round is completed and the individual results have been compared, read aloud and agreed by each athlete, the Referee and each athlete must sign or initial the scorecard, unless the athlete does not agree with the result shown for him and it is his intention to make a protest.

9.14.5 Results

9.14.5.1 Individual Events

For each athlete the results of each round must be recorded legibly on official scorecards and the total of the Qualification rounds, the Final and any Shoot-offs must be recorded and the scores ranked in descending order (Ties – see Rules 9.15.1.1 and 9.18.3.4).

9.14.5.2 Team Events

a) Scores of each team member must be recorded and the number of all targets hit by the team members of each team in each of the Qualification Rounds must be totalled and the team's scores ranked in descending order (Ties – see Rule 9.15.3).

b) A team, of which a member has been disqualified, must not be ranked and must be shown in the result list with the remark **"DSQ."**

9.15 TIES AND SHOOT-OFFS

9.15.1 Competitions With Finals

Ties in Olympic events with Finals will be decided according to the following Rules.

EDITION 2017 | Second Print 01/2018
Copyright: ISSF

9.15.1.1 Ties Before Finals:

a) If two or more athletes are tied for a place in the Final, their Qualification ranking and places in the Final must be decided by a shoot-off in accordance with the Rules for Trap or Skeet (see 9.15.5). The starting positions in the shoot-off will be decided by the interim Qualification ranking (highest ranking athlete to shoot first). In case of a tie with perfect scores or a tie with the same scores that cannot be broken by the count back rule, the shooting order in the shoot-off shall be determined by drawing lots.

b) In case of more than one shoot-off, the higher position shoot-off(s) must be shot first;

c) If the shoot-off result of the athletes qualifying for the Final is the same, those athletes must continue to shoot-off until the tie is broken, in order to establish their Qualification ranking; Any remaining athletes with the same shoot-off result who do not gain a place in the Final (places 7 and below) must have their rankings determined according to the Countback rule (see 9.15.1.3);

d) Any athlete who is not in his assigned position and ready to shoot at the official starting time must not be allowed to participate in the shoot-off and will automatically be given the lower place in the shoot-off using his qualification score;

e) Whenever possible, shoot-offs to break ties before a Final should take place on a range other than the range that will be used for the Final; and

f) During shoot-offs before Finals, preparation time limits must be monitored by an electronic timing device (9.18.2.5) that must be managed by a Referee selected from among the appointed Referees (9.18.2.6 b).

9.15.1.2 Countback Rule

Any ties to be broken by this method must be decided as follows:

a) The scores of the last round of 25 targets (Double Trap 15 Doubles) must be compared. The winner is the athlete with the highest score in that round;

b) In a case where the tie is still not broken, the round **before** last must be compared and if still not broken, the round **before** that and so on; and

c) If the results of all the rounds are still equal, ties must be decided by counting **backward, target by target,** from the **last target** of the **last round** (and if necessary, the next to the last round etc.) until a tie-breaking zero (0) is found. If the tied athletes have zeroes (0) on the same target, the countback shall continue until the tie is broken.

Copyright: ISSF

9.15.1.3 Rankings

Individual tied scores ranking 7th place and below, not decided by a shoot-off, must be ranked according to the **Countback** rule. In case of an absolute tie, the tied athletes will share the same ranking, with their names listed in alphabetical order according to their family names.

9.15.2 Competitions Without Finals

9.15.2.1 Individual Ties

Ties in a non-Olympic event or category and in other competitions where there is no Final will be decided as follows;

9.15.2.2 Ties with Perfect Scores

These will not be broken, but will share first place with the names listed in order according to the Latin alphabet (family names). The next rankings must be appropriately numbered.

9.15.2.3 Ties for the First Three (3) Places

These must be decided by a shoot-off:

a) Starting positions will be decided by the interim Qualification ranking (highest ranking athlete to shoot first);

b) When several athletes are tied for more than one (1) ranking place, e.g. two (2) tied for second place (places 2 and 3) and two (2) athletes tied for fifth place (places 5 and 6), they will all shoot-off on the same range to determine the individual ranking; and

c) The tie for the lowest ranking position will be broken first, followed by the next higher ranking position until all ties are broken. All tied athletes will be ranked according to the score from the shoot-off series.

9.15.2.4 Ties for 4th Place and Below

Individual tied scores ranking in 7th place and below, not decided by a shoot-off, must be ranked according to the **Countback** rule.

EDITION 2017 | Second Print 01/2018
Copyright: ISSF

9.15.3 Team Ties

If two (2) or more teams have the same scores, rankings must be decided by the **combined** score of the team members in the last round of targets, then by the next to the last round, etc. until the tie is broken. If the tie is not broken (i.e. all the combined scores of the team members are the same, in all rounds) then ties must be decided by counting **backward,** from the combined score of the team members of the **last target** of the **last round** (and if necessary, the next to the last target o the next to the last round etc.). The team with the lower combined score of the last target will be given the lower ranking.

Example:

TEAM 1

Shooter 1 XXXXXXXXXXXXXOOXXXXXOXXXX 22

Shooter 2 XXXXXXXXXXXXXXXXXXXXXXXXO 24

Shooter 3 XXXXXXXXXXXXXXXXXXXXOXXXOX 23

369 2nd

TEAM 2

Shooter 1 XXXXXXXXXXXXXOXXXXXXOXXXX 23

Shooter 2 XXXXXXXXXXXXXXXXXXXXXXXOXX24

Shooter 3 XXXXXXXOXXXXXXXXXXXXXOXOX22

369 1st

9.15.4 Shoot-Offs

9.15.4.1 General

a) If the shoot-off time is not announced in advance, the athletes involved must remain in touch with the competition office whether personally or through their Team Leader in order to be ready to shoot when the shoot-off is called; and

b) Any athlete who is not in his assigned position and ready to shoot at the official starting time will be declared **"ABSENT,"** must not be allowed to participate in the shoot-off and will automatically be given the lower place in the shoot-off results using his qualification score.

Copyright: ISSF

9.15.4.2 Shoot-offs Before Finals

Shoot-offs **before** Finals must be conducted on standard targets, except when flash targets of the same type as those used in the Qualification rounds may be used. Whenever possible, Shoot-offs before Finals should start within a maximum of **thirty (30) minutes** after regular shooting is completed.

9.15.4.3 Shoot-offs In Finals

Shoot-offs in Finals must be conducted in accordance with Finals tie-breaking rules in 9.18.3.4.

9.15.4.4 Athlete Preparation Time in Shoot-offs Before Finals

After the Referee gives the command **"START,"** or after the preceding athlete has fired at a regular target, an athlete must take position, load his gun and call for the target, or double, within twelve (12) seconds of occupying the station in Trap or within 15 seconds for Skeet. A timing device must be used to control the Preparation Time in shoot-offs. In case of non-compliance with this time limit penalties will be applied.

9.15.5 Shoot-Off Procedures Before Finals (Trap, Skeet)

9.15.5.1 SAFETY:

No athlete may place a cartridge in any part of the gun until he is standing on the Station and preparing to shoot.

EDITION 2017 | Second Print 01/2018
Copyright: ISSF

9.15.5.2 Trap

a) Before the Shoot-Off starts a left and right hand target will be thrown from each of the five (5) stations. All tied athletes must then line up behind Station 1 in the order decided by their interim Qualification ranking (highest ranking athlete to shoot first). Starting on Station 1 they must shoot at regular targets until the tie(s) are broken according to the following sequence: Station 1 left target, Station 2 right target, Station 3 left target, Station 4 right target, Station 5 left target, then Station 1 again this time shooting at a right target and so on;

b) The first athlete must on command move onto the station, load and call for the target as shown in a) above;

c) Only one (1) shot is permitted at each target; the gun must be loaded with one (1) cartridge only; the second barrel must not be loaded with any empty, dummy or loaded cartridge. For a first violation the athlete will receive a **Warning (Yellow Card)**. For any second or subsequent violation the target will be declared **"LOST;"**

d) After shooting, the athlete must move to the rear of the athlete(s) who have yet to shoot;

e) Each athlete in the tie must in turn do likewise;

f) If after all athlete(s) have shot on Station 1 and a tie remains, all athletes in the tie must move to Station 2 and repeat the procedure; and

g) This system of shooting station by station must continue as long as a tie remains.

h) If an athlete inadvertently shoots out of turn, the result of the shot must be recorded and the athlete given an official **Warning (Yellow Card)**. Any repetition must result in the target shot at being declared **"LOST."**

Copyright: ISSF

9.15.5.3 Skeet

a) Before the shoot-off starts, the first athlete must stand immediately behind Station 4 and be permitted to see one (1) regular double;

b) All tied athletes will then shoot in turn on Station 4 in the order decided by their interim Qualification ranking (highest ranking athlete to shoot first);

c) After the Referee declares **"START,"** the first athlete must move on to the station, load and shoot at a regular double (high/low). He must then leave the station and go to the rear of the athletes who have yet to shoot;

d) All athletes in the tie must in turn do likewise;

e) The athlete(s) who miss the highest number of targets after each double are the losers and must retire;

f) All those who are still tied must remain, and the first athlete must then move on to the station, load and shoot at a reverse double (low/high). He must then leave the station and go to the rear of the athletes who have yet to shoot;

g) All athletes still in the tie must in turn do likewise; and

h) If any ties remain unbroken, this procedure of shooting at a **regular** double and a **reverse** double must continue until all results are determined.

i) If an athlete inadvertently shoots out of turn, the result of the shots must be recorded and the athlete given an official **Warning (Yellow Card)**. Any repetition must result in the targets shot at being declared **"LOST."**

9.16 RULE VIOLATIONS

The Jury, the Chief of Referees and the Referee will decide rule violations based on three (3) classes of infringements or violations of the Rules:

a) "OPEN" – unconcealed;

b) "TECHNICAL" – minor rule infringements; and

c) "CONCEALED" – deliberate or very serious breaches of the rules or of safety.

9.16.1 The Jury is responsible for examining and deciding the degree of penalties to be imposed for all reported violations, that are not automatically imposed according to these rules.

EDITION 2017 | Second Print 01/2018
Copyright: ISSF

9.16.2 When rule violation cards are shown, they must be accompanied by the command "**Warning" (Yellow Card), "Deduction" (Green Card) or "Disqualification" (Red Card)** as appropriate, in a manner that leaves no doubts in the offender's mind as to the meaning of the action taken. It is not necessary to show a warning card prior to the issuance of any deduction or disqualification card.

9.16.3 WARNING (Yellow Card)

9.16.3.1 Open Violations

In the case of initial open violations of the rules, such as:

a) Dress Code violation;

b) Unnecessary interruption of the shooting;

c) Receiving illegal coaching during the competition;

d) Unauthorized intrusion into the competition area;

e) Unsportsmanlike conduct;

f) Deliberate attempt to evade the spirit of the rules; or

g) Any other incident that requires a warning to be issued.

9.16.3.2 A **Warning (Yellow Card)** indicated on the relevant scorecard by a Jury Member, Chief of Referees or Referee, will first be given so that the athlete, Coach or Team Official may have the opportunity to correct the fault.

9.16.3.3 If an athlete does not correct the indicated fault within the stipulated time, penalties will be imposed.

9.16.3.4 In repeated infringements by a coach, or other team official, the Jury will require the offender to leave the vicinity of the shooting range for the remainder of the round and the athlete may be penalized.

9.16.3.5 Technical Violations

In the case of initial **technical violations** during a competition round such as:

a) Foot fault;

b) Exceeding the time limit allowed to call for the shot;

c) In Skeet, the athlete's READY position is not according to the rules;

d) In Skeet, except on Station 8, the athlete opens the gun between the two (2) single shots on the same station; or

e) Following or pointing with the gun at a slow or fast pull target without shooting.

Copyright: ISSF

9.16.3.6 A **Warning (Yellow Card)** indicated on the relevant scorecard, will be shown to any offending athlete by a Referee.

For each second or subsequent occurence in a round of any of the violations listed above, the athlete must be penalized by the Referee according to the Special Technical Rules for each event (Trap: 9.8.8.4; Skeet: 9.10.8). This must be indicated on the scorecard by the Referee before the card is sent to the RTS Office.

Referee Procedure: The Referee must command **"STOP,"** inform the athlete of the penalty and display the Green Card, adjust the scoreboard and instruct the next athlete to continue.

9.16.4 Deduction (Green Card)

9.16.4.1 Deduction of targets for other offences imposed by at least two (2) Jury Members must be taken from the round in which the offence occurred.

Deduction of one (1) point must be given in each instance for:

a) Impeding another athlete in an unsportsmanlike manner;

b) Failure to be present or provide a suitable substitute when required to act as Assistant Referee;

c) If when asked to give an explanation for an incident, an athlete consciously and knowingly gives false information;

d) If the athlete does not report on time for the Semifinal stage; and

e) Interfering with range equipment after an initial violation.

9.16.4.2 Uncompleted Round

Deduction of all remaining points in the round must be given by a majority of the Jury in instances when an athlete leaves the range without completing the round and without the permission of the Referee.

9.16.4.3 Absent Athlete

If an athlete is not present on the range when his name is checked with the scorecard, the Referee must have the athlete's Bib Number and name called out loudly three (3) times within one (1) minute. If the athlete does not appear by the end of that minute the Referee must declare him **"ABSENT"** and he **must not** be allowed to join the squad and shooting must start without him.

EDITION 2017 | Second Print 01/2018
Copyright: ISSF

9.16.4.4 Make up Round of Absent Athlete

a) An athlete who is declared **"ABSENT"** must present himself to the Chief of Referees before the squad has finished for that round and request permission to shoot the missed round. Failure to do so may result in disqualification; and

b) The athlete will then be permitted to shoot the missed round at a time and on the range decided by the Chief of Referees with a deduction of three (3) points to be applied against the last three (3) targets hit in the make-up round. The athlete should, if possible, shoot a make-up round on the same range as the one he had to leave.

9.16.4.5 Exceptional circumstances

If an athlete arrives late for a competition or fails to present himself to the Chief of Referees before the squad has finished that round and it can be proved that the lateness was due to circumstances beyond his control, the Jury must whenever possible give him the opportunity to take part without disruption of the overall shooting program. In this case the Chief Referee will determine when and where he will shoot and no penalty will be imposed.

9.16.5 Disqualification (Red Card)

9.16.5.1 **Disqualification (Red Card)** is required in accordance with 9.4.1.1 or 9.4.3.2 c) for violations involving guns, Skeet marker tapes or ammunition. Disqualification according to 9.16.5.2 (below) may only be given by a decision of the majority of the Jury. The disqualification of an athlete is expressed by the Jury by showing a **Red Card** with the word "**Disqualification**." If an athlete is disqualified during any phase of an event (Qualification or Final), the results for that athlete for all phases of that event must be deleted and the athlete must be listed at the end of the results list with an explanation regarding why the athlete was disqualified.

Copyright: ISSF

9.16.5.2 **Disqualification (Red Card)** of an athlete, or the banning of a Team Official or coach from the shooting ranges may be given for:

a) Serious breaches of safety and violations of the safety rules;

b) Handling a gun in a dangerous manner (repeated accidental discharges may be a cause for consideration);

c) Handling of a loaded gun after a **"STOP"** command has been given;

d) Repetition of incidents that have already been the subject of a warning or deduction;

e) Deliberate abuse of any team or range official;

f) Continued refusal by an athlete to act as an Assistant Referee;

g) Deliberate failure to shoot a previously missed round;

h) Consciously and knowingly giving false information in a deliberate attempt to conceal the facts in serious cases; or

i) Cases where violations are deliberately concealed.

9.17 PROTESTS AND APPEALS

9.17.1 Disagreement with a Referee Decision

9.17.1.1 Action by Athlete

a) If an athlete disagrees with a Referee's decision regarding a particular target he must act immediately **before the next athlete fires**, raising an arm and saying **"PROTEST;" and**

b) The Referee must then temporarily interrupt the shooting and after hearing the opinions of the Assistant Referees, make his decision. No protest will be accepted after the next athlete fires (see also 9.18.6).

9.17.1.2 Action by Team Official

a) If a team official is not satisfied with the final decision of the Referee, except for **"HIT," "LOST," "NO TARGET"** or **"IRREGULAR"** targets, he must not delay the shooting, but must attract the attention of the Referee who will make a notation on the scorecard that the athlete is continuing under protest; and

b) The protest must be resolved by the Jury.

EDITION 2017 | Second Print 01/2018
Copyright: ISSF

9.17.2 Verbal Protests

Any athlete or team official has the right to protest regarding a condition of the competition, or a decision or action by a competition official **immediately and verbally** to a Jury Member, the Chief Range Officer, the Chief of Referees or a Referee.

9.17.2.1 Such protests may be made on the following matters:

a) That ISSF Rules were not followed;

b) That the current competition program was not followed;

c) Disagreement with a decision or action of any competition official; and

d) That an athlete was impeded or disturbed by another athlete, a competition official, spectators, the media or other persons or causes.

Note: Only the athlete concerned may question a decision by the Referee on a **"HIT," "LOST," "NO TARGET"** or **"IRREGULAR"** target by taking action as in Rule 9.17.1.1.

9.17.2.2 Competition officials who receive verbal protests must consider them immediately, take immediate action to correct the situation or refer the matter to the Jury for a decision. Shooting may be temporarily stopped if absolutely necessary.

9.17.3 Written Protests

a) Any athlete or team official who does not agree with the action or decision taken on a verbal protest may submit a formal protest in writing to the Jury; or

b) A written protest (Protest Form P) may be submitted without first making a verbal protest.

9.17.3.1 Protest Time Limit

Any written protest (Protest Form P) must be **submitted to a member of the Jury within ten (10) minutes** after the end of the round in which the alleged incident occurred. The protest must be accompanied by a 50,00 EUR fee. If the protest is denied, the fee must be given to the Organizing Committee; if the protest is upheld the fee must be returned.

9.17.4 Appeals

In the event of a disagreement with a Jury decision the matter may be submitted to the Jury of Appeal, except that decisions by a Finals Protest Jury may not be appealed.

Copyright: ISSF

9.17.4.1 Appeal Time Limit

Such appeals must be submitted in writing **not later than twenty (20) minutes** after the Jury decision has been announced. The appeal must be accompanied by a 100,00 EUR fee. If the appeal is denied, the fee must be given to the Organizing Committee; if the appeal is upheld the fee must be returned.

9.17.4.2 Jury of Appeal Decision

The decision of the Jury of Appeal or Finals Protest Jury is FINAL.

9.18 FINALS IN OLYMPIC SHOTGUN EVENTS

Finals may be conducted either on a separate range designated as a Finals Range that is not used for Qualification competitions or on one of the ranges used for Qualification competitions.

9.18.1 Finals Format:

a) The full program (General Regulations, 3.3.2.3 and 3.3.4) must be fired in each Olympic event as a Qualification for the Final. The six (6) highest-ranking athletes in the Qualification advance to the Final;

b) Finals consist of finalists firing at a series of target sequences, with progressive eliminations beginning after all finalists have fired at the required number of targets (25, 30 or 20 targets, depending upon the event) and continuing until the gold and silver medals are decided; and

c) Finalists start at zero; scores from the Qualification are not carried forward; results from all stages of a Final are cumulative.

9.18.2 General Finals Requirements

9.18.2.1 Finals Facilities

One range with a large spectator stand must be designated as the Shotgun Finals Range. The Shotgun Finals Range must have a designated reporting area where cartridge controls can be done, where finalists can report.

EDITION 2017 | Second Print 01/2018
Copyright: ISSF

9.18.2.2 Reporting Time:

a) Athletes in the Final or their coach or team official must report to the Finals Range not later than 30 minutes before the Final Start Time for cartridge control, except in the Olympic Games, athletes in the Final must report 30 minutes before;

b) Athletes must report to the Finals Range at least 15:00 minutes before the start of the Final. No additional cartridges may be brought to the Finals Range;

c) A one (1) point penalty will be deducted from the score of the first hit target in the Final if the athlete's cartridges are not presented 30 minutes before and/or if the athlete does not report on time 15 minutes before;

d) Athletes must report with their equipment, competition clothing and a national team uniform that may be worn in the Victory Ceremony. The Jury must confirm that all finalists are present and that their names and nations are correctly recorded in the results system and on the scoreboards. Juries must complete cartridge and equipment controls as soon as possible after the athletes report; and

e) Any finalist who does not report for the start of the Presentation will not start and will be ranked last in the Final.

9.18.2.3 Start Time. The Start Time for a Final is when the Referee commands **"READY"** for the first competition shot.

9.18.2.4 Start Positions and Bib Numbers. New bib numbers (1-6) must be issued for Finals. Starting positions in a Final are assigned according to the Qualification ranking, with the highest ranking athlete having bib number 1. In shoot-offs to decide medals, athletes must shoot in bib number order (lowest number shoots first).

9.18.2.5 Test Firing and Showing Targets. Before the start of a Final, targets must be shown and the finalists must be permitted to test fire.

9.18.2.6 Special Equipment.

Finals Ranges must be equipped with a speaker system for the Announcer and sound technician to use, seating for Jury members and the coach of each finalist, an electronic, color scoreboard (see ***ISSF Guidelines for Organizers*** for detailed requirements) and an electronic timing system (to control preparation time limits).

Copyright: ISSF

9.18.2.7 Finals – Officials. The following personnel shall conduct and supervise the Final:

a) Referee. An experienced official with an ISSF Shotgun Referee's license must conduct the Final;

b) Assistant Referees & Timing System Referee.

Two Referees must be appointed as Assistant Referees to assist and advise the Referee in charge. One Referee must be appointed to manage the electronic timing device. All Referees shall be selected by the Chief Referee from the appointed Competition Referees.

c) Competition Jury. The Competition Jury must supervise the conduct of the Final. One (1) Jury member must be designated as the Jury-Member-in-Charge;

d) Finals Protest Jury. One (1) member of the Jury of Appeal, the Jury Member-in-Charge and one (1) other member of the Competition Jury, as designated by the Technical Delegate and Jury Chairman, must decide any protests that may be made during the Final;

e) Technical Officer. The Official Results Provider appoints the Technical Officer to prepare and operate the technical scoring system and the graphic display of results. In case of technical problems that may influence the Final, he will contact the Jury-Member-in-Charge and the Referee directly so appropriate decisions may be taken quickly; and

f) Announcer. An official designated by the ISSF or the Organizing Committee must be responsible for introducing finalists, announcing scores and providing information to spectators.

g) Sound Technician. A technical official responsible for operating the sound and music system during competitions.

9.18.2.8 Finals Production and Music. The conduct of a Final must use color, music, announcements, commentary, staging and CRO commands in a total sports presentation that portrays the athletes and their competitive performances in the most appealing and exciting ways to spectator and television audiences

9.18.3 Competition Procedures. Finals competitions are conducted according to these procedures. The Technical Rules for each event also apply to the Finals except where differences are described in this Rule (Rule 9.18).

EDITION 2017 | Second Print 01/2018
Copyright: ISSF

9.18.3.1 **Trap**. Finalists shoot one shot only at each target (see Rule 9.15.5.2 c). Finalists occupy stations 1-2-3-4-5-6 in Bib Number order (9.18.2.3, lowest Bib Number on Station 1). After each athlete has shot on a station, he must move to the next station to fire in sequence on that station. A timing system to control the 12-second preparation time limit must be used. Each Final consists of a series of target sequences followed by progressive eliminations that continue until the gold and silver medals are decided, as follows:

a) After the six finalists complete a normal round of 25 targets, the 6th place athlete is eliminated, in case of a tie the athlete with the lowest Qualification ranking (higher bib number) is eliminated;

b) After the five remaining finalists shoot at another 5 targets and complete 30 targets, the 5th place athlete is eliminated, in case of a tie the athlete with the lowest Qualification ranking (higher bib number) is eliminated;

c) After the four remaining finalists shoot at another 5 targets and complete 35 targets, the 4th place athlete is eliminated, in case of a tie the athlete with the lowest Qualification ranking (higher bib number) is eliminated;

d) After the three remaining finalists shoot at another 5 targets and complete 40 targets, the 3rd place (bronze medalist) athlete is eliminated, in case of a tie the athlete with the lowest Qualification ranking (higher bib number) is eliminated;

e) The 5-target sequences in b), c) and d) above consist of 2 left, 2 right and 1 straight randomly selected targets for each finalist;

f) After the two remaining finalists shoot at another 10 targets and complete 50 targets, the 1st and 2nd places are decided (gold and silver medals), in case of a tie there is an immediate shoot-off;

g) The 10-target sequence in f) above consists of 4 left, 4 right and 2 straight randomly selected targets for each finalist. The total of 25 targets in b), c), d) and f) above, must consist of 2 left, 2 right and 1 straight target from each of the five stations for each finalist; and

h) After each elimination stage, the remaining athletes retain their original positions.

Copyright: ISSF

9.18.3.2 **Skeet.** Finalists will shoot on each station in bib number order. A timing system to control the 30-second preparation time limit must be used. Each Final consists of series of target sequences followed by progressive eliminations that continue until the gold and silver medals are decided, as follows:

a) All six finalists will shoot, in sequence, at 20 targets, with one regular double and one reverse double on station 3, one regular double on station 4, one regular double and one reverse double on station 5, one regular double and one reverse double on station 3, one reverse double on station 4 and one regular double and one reverse double on station 5. After the six finalists complete 20 targets, the 6th place athlete will be eliminated, in case of a tie the athlete with the lowest Qualification ranking (higher bib number) is eliminated;

b) The five remaining finalists will shoot another 10 targets, with one regular double and one reverse double on station 3, one regular double on station 4 and one regular double and one reverse double on station 5. After 30 targets, the 5th place athlete will be eliminated, in case of a tie the athlete with the lowest Qualification ranking (higher bib number) is eliminated;

c) The four remaining finalists will shoot another 10 targets with one regular double and one reverse double on station 3, one reverse double on station 4 and one regular double and one reverse double on station 5. After 40 targets, the 4th place athlete will be eliminated, in case of a tie the athlete with the lowest Qualification ranking (higher bib number) is eliminated;

d) The three remaining athletes will shoot another 10 targets, with one regular double and one reverse double on station 3, one regular double on station 4 and one regular double and one reverse double on station 5. After 50 targets, the 3rd place athlete (bronze medalist) will be eliminated, in case of a tie the athlete with the lowest Qualification ranking (higher bib number) is eliminated;

e) The two remaining athletes will shoot another 10 targets, with one regular double and one reverse double on station 3, one reverse double on station 4 and one regular double and one reverse double on station 5. After 60 targets, the 1st and 2nd places are decided (gold and silver medals), in case of a tie there is an immediate shoot-off; and

f) On station 4, the Referee must inform the first finalist whether the double is a regular double or a reverse double.

EDITION 2017 | Second Print 01/2018
Copyright: ISSF

9.18.3.3 **Tie-Breaking (Shoot-off) Procedures**. Ties for places three through six will be broken according to the bib number order (Qualification ranking). If there is a tie for 1st and 2nd places, the shoot-off will begin immediately and there will be no showing of targets or test firing. The shoot-off will be conducted according to these procedures:

a) Trap. The athletes must line up behind Station 1 in bib number order. Starting on Station 1, they must each shoot at regular targets until the tie is broken according to the following sequence: Station 1 left target, Station 2 right target, station 3 left target, Station 4 right target, Station 5 left target, then Station 1 again this time shooting at a right target and so on. Only one (1) shot is permitted at each target. After shooting, the athlete must move to the rear of the athlete who has yet to shoot.

Note: Preparation time limit = 12 seconds.

Skeet. The tied athletes must line up behind Station 3 in bib number order. The athletes must shoot one regular double; if the tie is not broken with the first double, they must shoot one reverse double on that station; if the tie is not broken they advance to Station 4 to shoot one regular double, and if the tie is not broken one reverse double; this sequence continues on Station 5 and then back to Station 3, etc. until the tie is broken.

Note: Preparation time limit = 15 seconds.

9.18.3.4 If during a shoot-off, an athlete inadvertently shoots out of turn, the result of the shots must be recorded and the athlete given an official **Warning (Yellow Card)**. Any repetition must result in the targets shot at being declared **"LOST."**

Copyright: ISSF

9.18.4 Procedure For Conducting Finals

Time	Stage	Procedure
a) 30:00 and 15:00 minutes before	Finalists Report for Cartridge Control	Athletes in the Final or their coaches or team officials must report to the Finals Range on time (Rule 9.18.2.1). The Jury will instruct the finalists or their coaches or team officials to place all of their cartridges in numbered boxes (corresponding to bib numbers). The Jury will select cartridges for cartridge control and conduct equipment inspections. Cartridge checks must be completed before the presentation. Athletes may leave the FOP and must return at least 15:00 min. before the start of the Final. No additional cartridges may be brought to the FOP.
b) 10:00 minutes before	Target Showing and Test Fire	The Referee will authorize the finalists to complete their warm-ups and test fire shots and show the targets according to the rules for each event.
c) 5:00 minutes before	Assemble for Introductions	The six (6) finalists, the Referee and the Jury Member-in-Charge must report to a designated presentation area in the center of the range.
d) 4:00 minutes before	Introduction of Finalists	The Announcer will introduce, in bib number order (with number one on the right, as they face the audience), the finalists by giving the name, nation and brief information about each finalist. The Announcer must also introduce the Referee and the Jury Member-in-Charge.
e) 1:00 minutes before	Preparation	One (1) minute before the first shot in the Final, the Referee will instruct the finalists to go to their shooting stations.
f) Competition firing starts at 0:00	Start of Final	The Referee will instruct the first athlete to begin with the command **"READY."** Each athlete in Trap has twelve (12) seconds to call for each target or double. In Skeet, on every station, each finalist has thirty (30) seconds after occupying the station to call for and fire at two doubles, except that in tie-breaking shoot-offs the preparation time is 15 seconds.
g) Scoreboard Pauses		In Trap Finals, scoreboard pauses occur after all finalists have fired at 5 targets and subsequently after every 5 targets. In Skeet Finals, scoreboard pauses will occur after all athletes have completed each station. Television productions use these pauses to display current scores and rankings for spectators. The Announcer will make brief comments about the athletes and scores and, as appropriate, recognize the athletes who are eliminated or announce that a tie-breaking shoot-off will take place. After 5-25 seconds, the Referee will instruct the first athlete to start the next shots with the command **"READY."**

EDITION 2017 | Second Print 01/2018
Copyright: ISSF

Time	Stage	Procedure
h) Finals Completion		If there is no tie for 1st place (gold medal), the Jury Member-in-Charge will immediately declare **"RESULTS ARE FINAL."** If there is a tie, the Jury Member-in-Charge will direct the Referee to conduct the tie-breaking shoot-off. After the tie is broken, the Jury Member-in-Charge must immediately declare **"RESULTS ARE FINAL."**
i) After Medals are Decided		After the Jury Member-In-Charge declares **"RESULTS ARE FINAL,"** the Jury-Member-In-Charge must assemble the three medalists on the FOP and the Announcer must recognize the medal winners by announcing: "THE BRONZE MEDAL WINNER, REPRESENTING (NATION), IS (NAME)." "THE SILVER MEDAL WINNER, REPRESENTING (NATION), IS (NAME)." "THE GOLD MEDAL WINNER, REPRESENTING (NATION), IS (NAME)."

9.18.5 Malfunctions During Finals

a) If the Referee decides that a disabled shotgun, or the malfunctioning of the shotgun or ammunition, is not the fault of the athlete, the athlete must be given not more than three (3) minutes in which to repair the shotgun or obtain another approved shotgun, or replace his ammunition. If this cannot be done within three (3) minutes, the athlete must withdraw.

b) After the malfunction is corrected or the athlete withdraws, the Final must continue. A withdrawn athlete's final ranking will be determined by the total number of targets hit when the malfunction occurred.

c) An athlete is allowed a maximum of two (2) malfunctions during a Final, including any shoot-offs, whether or not he has tried to correct the malfunction.

d) Any regular target(s) on which any further malfunction occurs will be declared **"LOST"** whether or not the athlete attempted to fire.

Copyright: ISSF

9.18.6 Protests During Finals

a) If an athlete disagrees with a Referee's decision regarding **"HIT," "LOST," "NO TARGET"** or **"IRREGULAR"** target(s), he must act immediately before the next shooters fires, by raising an arm and saying **"PROTEST."**

b) The Referee must then temporarily interrupt the shooting and after hearing the opinions of the Assistant Referees, make his decision. No protest will be accepted after the next athlete fires.

c) Any other protest by the athlete or coach will be decided by the Finals Protest Jury immediately (9.18.2.6). The decision of the Finals Protest Jury is final and cannot be appealed.

d) If a protest in a Final for any matter other than Referee decisions on **"HIT," "LOST," "NO TARGET"** or **"IRREGULAR"** targets is lost, a penalty of two (2) points must apply to the last two (2) **"HIT"** targets.

e) No protest fee applies in a Final.

9.19 TRAP MIXED TEAM EVENT

9.19.1 General Competition Procedures

9.19.1.1 Event.

This Rule (9.19) provides special technical rules for the Trap Mixed Team and Trap Mixed Team Junior events.

9.19.1.2 Team Composition.

Mixed teams must be national teams (no mixed nations) with two team members, one male and one female (teams may include juniors, 3.3.6). Both team members should wear the same type of competition clothing with national colors and identification (see page 136 and Rule 6.20.2.2). In the Qualification, athletes will wear the same bib numbers as those of the individual competition. New bib numbers will be issued after the Qualification ranking is established, as per 9.19.2.7.

9.19.1.3 Team Entries.

Nations may enter a maximum of two teams in one Championship Mixed Team event. The entry fee for each team is EUR 170.00 (3.7.4.1). Team members may be changed for other athletes registered in the Championship not later than 12:00 hours on the second day before the day of the Mixed Team competition.

EDITION 2017 | Second Print 01/2018
Copyright: ISSF

9.19.1.4 Competition Format.

The event will be conducted in two stages:

a) QUALIFICATION

b) FINAL

9.19.1.5 Scheduling.

In ISSF Championships, the Qualification and Final will normally be scheduled on the same day following the Trap Women and Trap Men individual events.

9.19.1.6 Team Scores.

Scores and rankings are based on the total scores of the two team members in each stage of competition.

Copyright: ISSF

9.19.1.7 Shoot-Offs.

a) Shoot-offs will be used to decide:

- Ties after the Qualification for a place in the Final.
- Ties after the Qualification for positions 1 to 6 in the Final.
- Ties for 1st and 2nd place in the Final.

b) Shoot-offs after the Qualification:

- Must be conducted on a range other than the Finals Range.
- Higher position ties must be shot off first.
- The team with the highest-ranking Qualification score (Rule 9.15.3) shoots first.
- Teams will be allowed to test fire and observe targets.

c) Shoot-offs during the Final (ties for 1st place only):

- The team with the lowest bib number shoots first.
- There will be no test firing or showing of targets.

9.19.1.8 Shoot-Off Procedures.

Rule 9.15.5.2 Trap shoot-off procedures will be used as follows:

a) Both members of each tied team must participate in the shoot-off.

b) Each team coach must designate which team member (male or female) will shoot the first target.

c) Only one (1) shot is permitted at each target (9.15.5.2 c)).

d) The athletes designated to shoot first must line up behind station 1 and shoot at a regular target according to Rule 9.15.5.2.

e) If the tie is not broken, the same procedure will continue on station 2 with the second member of each team shooting.

f) This procedure will continue with the team members shooting in alternate order (Team member shooting order will be 1 – 2 – 2 – 1 – 1 - 2, - 2, etc.) on successive stations until the tie is broken

EDITION 2017 | Second Print 01/2018
Copyright: ISSF

9.19.1.9 Coaching.

Coaching during the Qualification will be governed by 6.12.5 (non-verbal coaching is allowed). During the Final, six chairs must be placed to the left rear of station 6 for the coach and one team member for the teams that are firing on stations 6-1-2. Six chairs must be placed to the right rear of station 5 for the coach and one team member for the teams that are firing on stations 3-4-5. Coaches who occupy these chairs must wear their national uniform or a clear identification of their nation/NOC on their backs. Coaches and athletes who are in these chairs may speak with each other during the competition, provided they do not disturb the athletes who are firing.

9.19.1.10 Coaching Time-Out.

During the Final, coaches may call one (1) Coaching Time-Out for a maximum duration of one (1) minute when it is the turn of that team's athlete to fire. The Jury-Member-in-Charge must control the time. If a time-out is called, all coaches may speak with their athletes during this time. The Announcer may make commentary during Coaching Time-Outs.

9.19.1.11 Malfunctions.

Malfunctions in the Qualification will be decided according to 9.12. Malfunctions during Finals will be decided according to 9.18.5.

9.19.1.12 Protests.

Protests during the Qualification will be decided according to 9.17. Any protests during Finals will be decided by the Finals Protest Jury according to 9.18.2.6 d).

9.19.1.13 Music and Spectator Activity.

During the Finals, music must be played and spectators will be encouraged to support and cheer for their favorite teams.

9.19.2 QUALIFICATION

9.19.2.1 Schedule.

The start time for the Qualification must be published in the Official Program.

9.19.2.2 Squadding.

Team squadding will be done by a random draw. The two members of each team must be squadded to fire next to each other on the same squad, with the man firing first and the woman second. Teams from the same nation shall not be in the same squad.

Copyright: ISSF

9.19.2.3 Athlete Communication.

Team members are permitted to speak with each other after they have shot and before moving to the next station, provided their communications do not disturb other athletes.

9.19.2.4 Qualification.

Each athlete on a team will fire three rounds of 25 targets on three (3) ranges for a total of 75 targets per athlete (150 targets per team). The ISSF Qualification format, Rule 9.8, will be used.

9.19.2.5 Team Ranking.

Teams will be ranked according to the total scores of the two team members.

9.19.2.6 Qualification Tie-Breaking.

Ties for positions one to six and/or ties for a place in the Final will be decided by shoot-offs (see also 9.19.1.7). All other ties will be decided by applying the Countback Rule (9.15.1.2) to the combined scores of the two team members.

9.19.2.7 Qualification for Final.

After the final Qualification ranking is established by completing any necessary shoot-offs, the top six (6) teams will advance to the Final. New bib numbers corresponding to the team ranking must be issued. Bib numbers must use the format shown in the diagram. The team members who shoot first must wear the white bib numbers; the team members who shoot second must wear the black bib numbers.

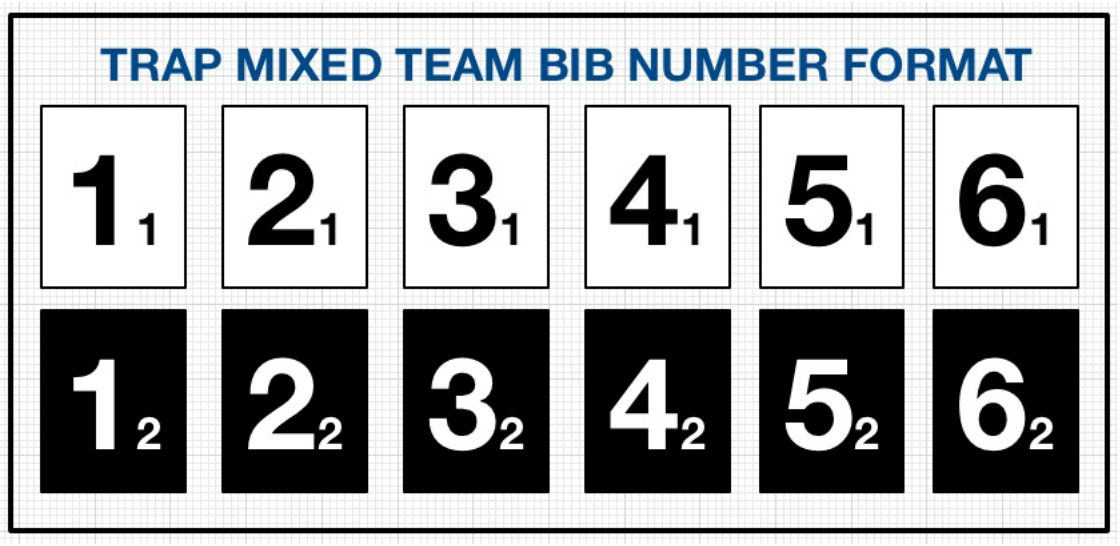

EDITION 2017 | Second Print 01/2018
Copyright: ISSF

9.19.3 FINAL

9.19.3.1 Schedule.

The start time for the Final must be published in the Official Program. The Final will take place on the Range designated for Finals.

9.19.3.2 Finals Officials.

The conduct and supervision of Mixed Team Finals will be done according to 9.18.2.6.

9.19.3.3 Team Reporting.

Teams that qualify for the Final must report for cartridge control at least 30 minutes before the Start Time. Juries must complete cartridge controls and equipment checks during the reporting period. Athletes must report to the Final Range at least 15:00 minutes before the start time. A one-point (1) penalty will be deducted from the score of the team's first hit target if a team's cartridges are not presented for cartridge control 30 minutes before or if a team member does not report on time 15 minutes before.

9.19.3.4 Test Firing and Showing Targets.

Before the start of the Final, targets must be shown and the athletes must be permitted to test fire.

9.19.3.5 Final Competition Procedures.

Finalists shoot only one shot at each target (see Rule 9.15.5.2.c). The team coach will decide the athlete to shoot first (male or female). The athletes who will shoot first for the six teams must take their positions on stations 1 - 6 in bib number order. The athlete who will shoot second must take his/her position next to his/her team coach on the left or right side of the FOP. The athletes who shoot first will start the competition by shooting five (5) targets in the normal Trap rotation. There will be a brief pause while the athletes who shoot second take their positions on stations 1 – 6 in bib number order. The athletes who shoot second will then take their positions and shoot five (5) targets. The Announcer will comment on the scores and rankings during each change. This rotation will be repeated until each team has fired at twenty-five (25) targets (2 right, 2 left and one center targets from each station; the athletes who shot first will have fired at 15 targets and the athletes who shot second will have fired at 10 targets).

9.19.3.6 Sixth Place Team Elimination.

After each team has completed a normal round of twenty-five (25) targets, the team with the lowest score is eliminated and ranked in 6th place. In case of a tie, the team with the lowest Qualification ranking (highest bib number) is eliminated. The Final will continue with the athletes who shoot second shooting at five (5) targets.

Copyright: ISSF

9.19.3.7 Fifth Place Team Elimination.

After the remaining teams have completed thirty (30) targets, the team with the lowest score is eliminated and ranked in 5th place. In case of a tie, the team with the lowest Qualification ranking (highest bib number) is eliminated. The Final will continue with the athletes who shoot first shooting at five (5) targets.

9.19.3.8 Fourth Place Team Elimination.

After the remaining teams have completed thirty-five (35) targets, the team with the lowest score is eliminated and ranked in 4th place. In case of a tie, the team with the lowest Qualification ranking (highest bib number) is eliminated. The Final will continue with the athletes who shoot second shooting at five (5) targets.

9.19.3.9 Third Place Team Elimination.

After the remaining teams have completed forty (40) targets, the team with the lowest score is eliminated and ranked in 3rd place (bronze medal winner). In case of a tie, the team with the lowest Qualification ranking (highest bib number) is eliminated. The Final will continue with the athletes who shoot first shooting five (5) targets followed by the athletes who shoot second shooting at five (5) targets.

9.19.3.10 Gold and Silver Medal Decision.

After the two remaining teams have completed fifty (50) targets, the 1st and 2nd place teams (gold and silver medal winners) are decided. In case of a tie, the tie will be decided by a shoot-off conducted according to 9.19.1.8.

9.19.3.11 Elimination Stage Procedures.

After each elimination stage, the remaining teams will retain their original positions. The 5-target sequences in 9.19.3.7, 9.19.3.8 and 9.19.3.9 consist of 2 left, 2 right and 1 straight randomly selected targets for each team. The 10-target sequence in 9.19.3.10 consists of 4 left, 4 right and 2 straight randomly selected targets for each team. The total of 25 targets in 9.19.3.7 through 9.19.3.10 must consist of 2 left, 2 right and 1 straight target from each of the five stations for each team. All target sequences in 9.19.3.6 through 9.19.3.10 must be the same as in the Trap individual Final format (Rule 9.18.3.1 a) to h).

9.19.3.12 Recognition of Medal Winning Teams.

After the gold and silver medals are decided, the Jury must assemble the three medal winning teams on the FOP and the Announcer will recognize the bronze, silver and gold medal winning teams.

EDITION 2017 | Second Print 01/2018
Copyright: ISSF

9.20 DRAWINGS AND TABLES

9.20.1 Trap Horizontal Angles

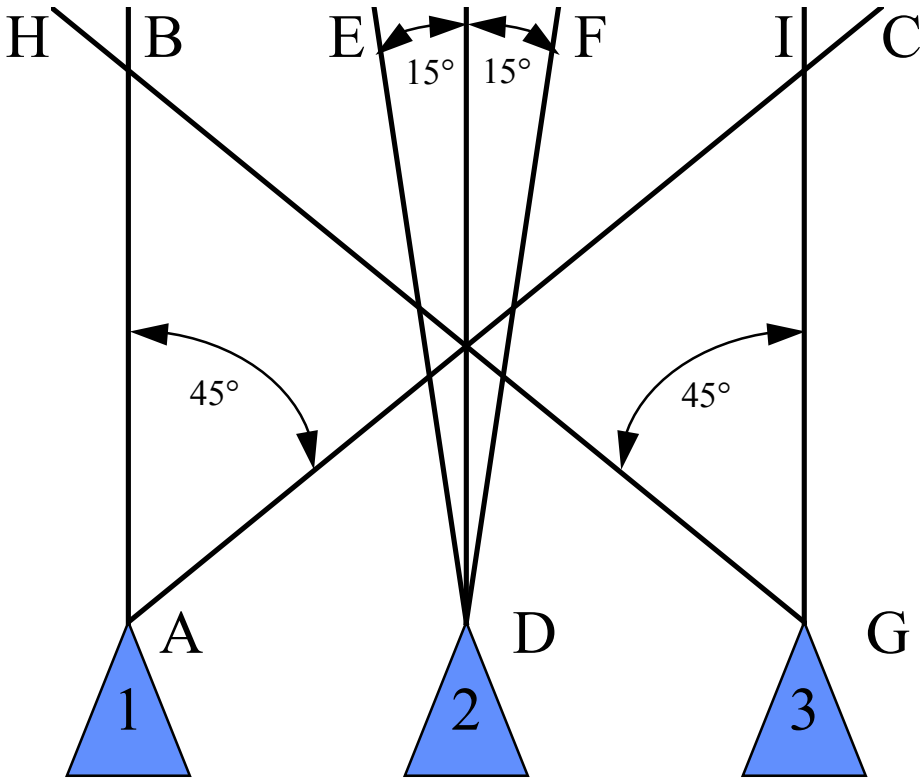

Maximum horizontal angles for first second and third trap in each group.

Targets from machine No. 1 must fall in area A B C.
Targets from machine No. 2 must fall in area D E F.
Targets from machine No. 3 must fall in area G H I.

Copyright: ISSF

9.20.2 Double Trap Horizontal Angles

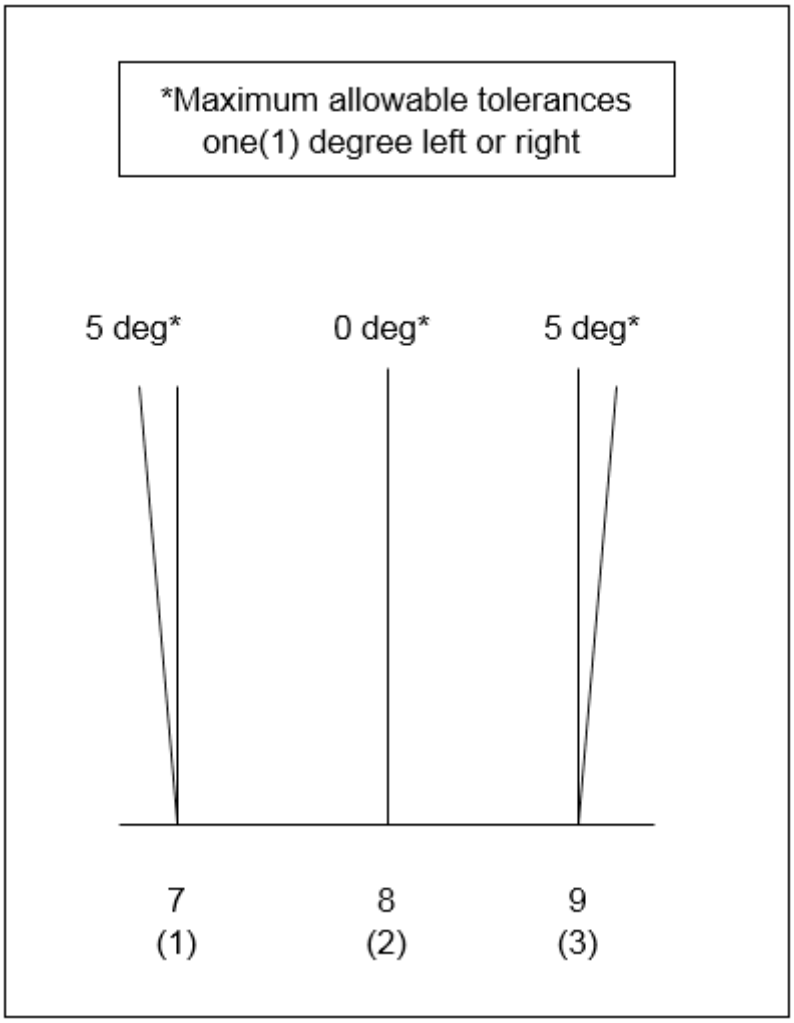

EDITION 2017 | Second Print 01/2018
Copyright: ISSF

9.20.3 Trap Setting Tables (I - IX)

Table I					
Group	**Trap Number**	**Target Direction (degrees)**	**Height at 10 m over level ground**	**Distance**	**NOTE**
1	1 2 3	25 R 5 L 35 L	2.00 m 3.00 m 1.50 m	76.00 m +/-1 m	
2	4 5 6	45 R 10 R 35 L	2.50 m 1.80 m 3.00 m		
3	7 8 9	35 R 5 L 45 L	3.00 m 1.50 m 1.60 m		
4	10 11 12	40 R 0 25 L	1.50 m 3.00 m 2.60 m		
5	13 14 15	20 R 5 R 35 L	2.40 m 1.90 m 3.00 m		

Table II					
Group	**Trap Number**	**Target Direction (degrees)**	**Height at 10 m over level ground**	**Distance**	**NOTE**
1	1 2 3	25 R 5 L 35 L	3.00 m 1.80 m 2.00 m	76.00 m +/-1 m	
2	4 5 6	40 R 0 45 L	2.00 m 3.00 m 1.60 m		
3	7 8 9	45 R 0 40 L	1.50 m 2.80 m 2.00 m		
4	10 11 12	15 R 5 R 35 L	1.50 m 2.00 m 1.80 m		
5	13 14 15	35 R 5 L 40 L	1.80 m 1.50 m 3.00 m		

Copyright: ISSF

Table III					
Group	**Trap Number**	**Target Direction (degrees)**	**Height at 10 m over level ground**	**Distance**	**NOTE**
1	1 2 3	30 R 0 35 L	2.50 m 2.80 m 3.00 m	76.00 m +/-1 m	
2	4 5 6	45 R 5 L 40 L	1.50 m 2.50 m 1.70 m		
3	7 8 9	30 R 5 R 45 L	2.80 m 3.00 m 1.50 m		
4	10 11 12	45 R 0 40 L	2.30 m 3.00 m 1.60 m		
5	13 14 15	30 R 0 35 L	2.00 m 1.50 m 2.20 m		

Table IV					
Group	**Trap Number**	**Target Direction (degrees)**	**Height at 10 m over level ground**	**Distance**	**NOTE**
1	1 2 3	40 R 10 R 30 L	3.00 m 1.50 m 2.20 m	76.00 m +/-1 m	
2	4 5 6	30 R 10 L 35 L	1.60 m 3.00 m 2.00 m		
3	7 8 9	45 R 0 20 L	2.00 m 3.00 m 1.50 m		
4	10 11 12	30 R 5 L 45 L	1.50 m 2.00 m 2.80 m		
5	13 14 15	35 R 0 30 L	2.50 m 1.60 m 3.00 m		

EDITION 2017 | Second Print 01/2018
Copyright: ISSF

Table V					
Group	**Trap Number**	**Target Direction (degrees)**	**Height at 10 m over level ground**	**Distance**	**NOTE**
1	1 2 3	45 R 0 15 L	1.60 m 3.00 m 2.00 m	76.00 m +/-1 m	
2	4 5 6	40 R 10 L 45 L	2.80 m 1.50 m 2.00 m		
3	7 8 9	35 R 5 L 40 L	3.00 m 1.80 m 1.50 m		
4	10 11 12	25 R 0 30 L	1.80 m 1.60 m 3.00 m		
5	13 14 15	30 R 10 R 15 L	2.00 m 2.40 m 1.80 m		

Table VI					
Group	**Trap Number**	**Target Direction (degrees)**	**Height at 10 m over level ground**	**Distance**	**NOTE**
1	1 2 3	40 R 0 35 L	2.00 m 3.00 m 1.50 m	76.00 m +/-1 m	
2	4 5 6	35 R 10 R 35 L	2.50 m 1.50 m 2.00 m		
3	7 8 9	35 R 5 L 40 L	2.00 m 1.50 m 3.00 m		
4	10 11 12	45 R 10 L 25 L	1.50 m 3.00 m 2.60 m		
5	13 14 15	25 R 5 R 45 L	2.40 m 1.50 m 2.00 m		

Copyright: ISSF

Table VII					
Group	**Trap Number**	**Target Direction (degrees)**	**Height at 10 m over level ground**	**Distance**	**NOTE**
1	1 2 3	35 R 5 L 20 L	2.20 m 3.00 m 3.00 m	76.00 m +/-1 m	
2	4 5 6	40 R 0 45 L	2.00 m 3.00 m 2.80 m		
3	7 8 9	40 R 0 40 L	3.00 m 2.00 m 2.20 m		
4	10 11 12	45 R 5 R 35 L	1.50 m 2.00 m 1.80 m		
5	13 14 15	20 R 5 L 45 L	1.80 m 1.50 m 2.00 m		

Table VIII					
Group	**Trap Number**	**Target Direction (degrees)**	**Height at 10 m over level ground**	**Distance**	**NOTE**
1	1 2 3	25 R 5 R 20 L	3.00 m 1.50 m 2.00 m	76.00 m +/-1 m	
2	4 5 6	40 R 0 45 L	1.50 m 3.00 m 2.80 m		
3	7 8 9	35 R 5 L 45 L	3.00 m 2.50 m 2.00 m		
4	10 11 12	45 R 0 30 L	1.80 m 1.50 m 3.00 m		
5	13 14 15	30 R 10 R 15 L	2.00 m 3.00 m 2.20 m		

EDITION 2017 | Second Print 01/2018
Copyright: ISSF

Table IX					
Group	**Trap Number**	**Target Direction (degrees)**	**Height at 10 m over level ground**	**Distance**	**NOTE**
1	1 2 3	40 R 0 20 L	3.00 m 1.80 m 3.00 m	76.00 m +/-1 m	
2	4 5 6	15 R 10 L 35 L	3.00 m 1.50 m 2.00 m		
3	7 8 9	45 R 0 30 L	1.60 m 2.80 m 3.00 m		
4	10 11 12	30 R 5 L 15 L	2.00 m 2.00 m 3.00 m		
5	13 14 15	35 R 0 45 L	2.90 m 1.60 m 2.20 m		

Copyright: ISSF

9.21 INDEX

Absent Athlete	9.16.4.3
Absent Athlete – Exceptional Circumstances	9.16.4.5
Advantage – In unofficial Training	9.6.2.2
Aiming – When Permitted	9.2.3
Ammunition – Cartridge Inspection	9.4.3.2
Ammunition – Cartridge Specifications	9.4.3.1
Ammunition – Malfunctions / Misfires	9.12.4.3
Ammunition – Not in Accordance with the Rules	9.4.3.2 b
Appeal Time Limit	9.17.4.1
Appeals	9.17.4
Application of Rules for all Shotgun Events	9.1.1
Assistant Referee – Absent – Deduction of one Point	9.5.6.3
Assistant Referee – Advising the Referee	9.5.6.4
Assistant Referees – Duties	9.5.6.2
Athlete – Replacement	9.11.2
Athlete's Clothing	9.13.1
Athlete's Equipment on Field of Play	9.4.1.2
Auxiliary Athletes – Fillers	9.11.4.2
Barrel Selection	9.12.3
Barrels	9.4.2.7
Bib (Start) Numbers	9.13.2
Blinders & Side Blinders	9.13.4
Broken Target	9.7.3
Buttstock Depth	9.4.2.9
Carrying Guns – Safety	9.2.2
Cartridge Inspection	9.4.3.2
Changing Guns	9.4.2.5
Chief of Referees – Duties	9.5.4.2
Chief Range Officer – Duties	9.5.3.3
Chief Range Officer – Responsibilities	9.5.3.2
Commands	9.2.6
Compensators	9.4.2.6
Competition Clothing (Rule 6.7) and Equipment	9.13
Competition Clothing – Open Toe or open heeled Shoes	9.13.1 b
Competition Officials	9.5

EDITION 2017 | Second Print 01/2018
Copyright: ISSF

Count Back Rule before the Finals	9.15.1.2
Deduction (Green Card)	9.16.4
Deduction of one Point	9.16.4.1
Disabled Shotguns	9.12.6
Disagreement with Referee's Decision	9.17.1
Disqualification (Red Card)	9.16.5
Disqualification in Finals	9.16.5.1
Double Trap – "Lost" Targets	9.9.8.3
Double Trap – "No Target" – Double	9.9.8
Double Trap – "No Target" – Referee's Decision	9.9.8 / 9.9.8.1
Double Trap – "No Target" even if Athlete has fired	9.9.8.1
Double Trap – "No Target" if Athlete has not fired	9.9.8.2
Double Trap – Competition Rules	9.9
Double Trap – Conduct of a Round	9.9.1
Double Trap – Horizontal Angles	9.20.2
Double Trap – Interruption – View of Targets	9.9.4
Double Trap – Involuntary Discharge	9.9.8.5
Double Trap – Irregular Trajectory	9.9.6.3
Double Trap – Jury Check	9.9.6
Double Trap - Malfunction	9.9.8.4
Double Trap – Method	9.9.2
Double Trap – Preparation Time Limit, additional Time to leave Station 5	9.9.3
Double Trap – Range (Separate Range) Drawing (Rule 6.4.19.4)	9.1.5
Double Trap – Refused Double	9.9.7
Double Trap – Refused Target – Procedure by the Athlete	9.9.7
Double Trap – Shooting into the Ground	9.9.9
Double Trap – Simultaneous Discharge	9.9.8.1 j / 9.12.1
Double Trap – Target Distances, Angles and Elevations	9.9.5
Double Trap – Trap Setting Table	9.9.5
Double Trap – Trial Targets	9.9.6.1
Drawings and Tables	9.20
Drawings, Figures and Tables (Rule 6.4.18.4)	9.1.5
Dry Firing Area	9.2.3 a
Ear Protection	9.2.7
Electronic Scoreboards	9.14.3.1
Electronic Scoreboards – Visible Scoreboards Errors	9.14.3.3
Equipment and Ammunition	9.4
Equipment on Field of Play	9.4.1.2

Copyright: ISSF

Equipment Control	9.4.1.1
Equipment Control – Skeet Marker Tape	9.10.4.2
Equipment Restrictions	9.4.1
Events	9.6.1
Eye Protection	9.2.7
Figures and Tables	9.1.5
Finals – Disabled Shotgun	9.18.5
Finals – Facilities	9.18.2.1
Finals – Finalists Reporting to the Range	9.18.2.2
Finals – General Requirements	9.18.2
Finals – Late or Absent Athlete	9.18.2.2
Finals – Malfunctions of Shotgun or Ammunition	9.18.5
Finals – Music & Production	9.18.2.8
Finals – Number of Finalists in each Event	9.18.1
Finals – Number of Malfunctions	9.18.5 c
Finals – Officials	9.18.2.7
Finals – Order of Shooting	9.18.2.4
Finals – Procedures for conducting Finals	9.18.4
Finals – Production and Music	9.18.2.8
Finals – Protest during Finals	9.18.6
Finals – Range Commands	9.18.4
Finals – Range Special Equipment	9.18.2.6
Finals – Ranking Procedure after an Uncompleted Finals	9.16.4.2
Finals – Reporting Time	9.18.2.2
Finals – Scoreboard Pauses	9.18.4 g
Finals – Shotgun Events	9.18
Finals – Skeet	9.18.3.2
Finals – Starting Time	9.18.2.3
Finals – Test Firing	9.18.2.5
Finals – Tie-breaking (Shoot-off) Procedures	9.18.3.3
Finals – Trap	9.18.3.1
Finals Competition Procedures	9.18.3
Four or more Tied Athletes for more than one Ranking Place	9.15.2.3
Guns – Changing	9.4.2.5
Guns – Compensators and Barrel Attachments	9.4.2.6
Guns – Magazines	9.4.2.4
Guns – Optical Sights	9.4.2.8
Guns – Ported Barrels	9.4.2.7

EDITION 2017 | Second Print 01/2018
Copyright: ISSF

Guns – Release Trigger	9.4.2.2
Guns – Slings	9.4.2.3
Guns – Types permitted	9.4.2.1
Guns, Equipment and Ammunition	9.4
High Visibility Jackets – Safety	9.2.1
Hit Target	9.7.4
Individual Results	9.14.5.1
Individual Ties in Competitions without Finals	9.15.2.1
Interfere with Range Equipment	9.3.c
Interruptions – Double Trap	9.9.4
Interruptions to Programme	9.11.3
Interruptions – Trap	9.8.4
Irregular Target	9.7.2
Jury – Duties before the Competition	9.5.2.1
Jury – Duties during the Competition	9.5.2.2
Jury – Majority Decision	9.16.5.1
Jury's Responsibility and Actions	9.16.1
Knowledge of the Rules	9.1.2
Left-handed Athlete – Right-handed Athlete	9.1.3
Lost Target(s)	9.7.5
Magazines	9.4.2.4
Make-up Round of Absent Athlete	9.16.4.4
Make-up Round – Double Trap	9.12.7.2
Make-up Round – Procedures	9.12.7
Make-up Round – Score Certification	9.12.8
Make-up Round – Trap	9.12.7.1
Make-up Round – Skeet	9.12.7.3
Malfunctions	9.12
Malfunctions – Actions after a Malfunction is declared	9.12.5
Malfunctions – Number of Malfunctions permitted	9.12.2
Malfunctions – Procedure in Event of a Malfunction	9.12.4
Malfunctions – Procedure to be followed by the Athlete	9.12.4.1
Malfunctions – Definition	9.12.1
Manual Scoreboards	9.14.3.4
Match Administration	9.11
Men's Events/Women's Events	9.1.4
Misfire – Ammunition Malfunction	9.12.4.3
Mixed Team Trap	9.19

Copyright: ISSF

National IOC Identity	9.13.3
No Target	9.7.6
Open Violations	9.16.3.1
Optical Sights	9.4.2.8
Ported Barrels	9.4.2.7
Pre-Event Training	9.6.2.1
Programme Interruptions	9.11.3
Protest – Action by Athlete	9.17.1.1
Protest – Action to be taken by a Team Official	9.17.1.2
Protest – To the Referee	9.17.1.1
Protest Time Limit	9.17.3.1
Protests and Appeals	9.17
Protests and Appeals except Decisions by a Finals Protest Jury	9.17.4
Protests and Appeals Time Limit	9.17.4.1
Range and Target Standards	9.3
Rankings	9.15.1.3
Referees	9.5.5
Referees – Duties and Functions	9.5.5.2
Regular Target	9.7.1
Release Triggers	9.4.2.2
Replacement of an Athlete	9.11.2
Results	9.14.5
Results, Timing and Scoring Procedures	9.14
RTS (Results, Timing and Scoring) Office	9.14.1
Right-handed Athlete – Left-handed Athlete	9.1.3
Rule Violations	9.16
Safety	9.2
Safety – STOP Command	9.2.5
Safety Flag	9.2.2 b
Score Certification	9.14.4
Scoreboard Pauses in Finals	9.18.4 g
Scoreboards	9.14.3
Scoreboards – Visible Scoreboard Errors	9.14.3.3
Scorecards – Maintained by the Assistant Referees	9.14.3.4
Scoring Procedure	9.14.2
Shoot-offs	9.15.4
Shoot-offs – General	9.15.4.1
Shoot-offs – Procedures	9.15.5

EDITION 2017 | Second Print 01/2018
Copyright: ISSF

Shoot-offs – Safety	9.15.5.1
Shoot-offs – Skeet	9.15.5.3
Shoot-offs – Trap	9.15.5.2
Shoot-offs – Athletes Preparation Time	9.15.4.4
Shoot-offs before Finals	9.15.4.2
Shoot-offs in Finals	9.15.4.3
Shooting and Test Firing	9.2.4
Shooting Order	9.11.4.5
Shooting Schedules	9.11.1
Shotguns	9.4.2
Side Blinders	9.13.4
Skeet – “Lost” Targets	9.10.8
Skeet – “Lost” Targets applying to Doubles	9.10.9
Skeet – “No Target” – Referee’s Decision	9.10.6 / 9.10.6.1
Skeet – “No Target” applying to Doubles	9.10.6.3
Skeet – “No Target” even if Athlete has fired	9.10.6.1
Skeet – “No Target” if Athlete has not fired	9.10.6.2
Skeet – Cartridge Loading Sequence	9.10.3.4
Skeet – Competition Rules	9.10
Skeet – Conduct of a Round	9.10.1
Skeet - Interruption	9.10.3.5 c
Skeet – Irregular Trajectory	9.10.3.8
Skeet – Marker Tape	9.10.4
Skeet – Marker Tape Check	9.10.4.2
Skeet – Method	9.10.2
Skeet – Preparation Time Limit	9.10.3.1
Skeet – Procedures for Station 8	9.10.3.3
Skeet – Ready Position	9.10.3.9
Skeet – Refused Target	9.10.5
Skeet – Refused Target – Procedure by the Athlete	9.10.5
Skeet – Shooting out of turn	9.10.7
Skeet – Sighting / Aiming on the Ranges	9.10.3.6
Skeet – START	9.10.1 / 9.10.2
Skeet – Target Distances and Elevations – Jury Check	9.10.3.7
Skeet – Target Setting Distances, Angles and Elevations	9.10.3.7
Skeet – Target Shooting Sequence for Qualification Rounds	9.10.3.2
Skeet – Trial Targets	9.10.3.5
Skeet Ranges – Layout Drawing (Rule 6.4.20.3)	9.1.5

Copyright: ISSF

Skeet Ranges – View Drawing (Rule 6.4.20.4)	9.1.5
Slings	9.4.2.3
Squad Adjustments	9.11.4.4
Squadding	9.11.4
Squadding – Composition	9.11.4.1
Squadding Draw	9.11.4.3
Squads – Shooting Order	9.11.4.5
Stop Command	9.2.5
Target Setting – Skeet Distances, Angles and Elevations	9.10.3.7
Targets – Regular / Irregular / Broken / Hit / Lost / Target	9.7
Team Results	9.14.5.2
Team Ties	9.15.3
Technical Violations	9.16.3.5
Test Firing – After a Gun Repair	9.2.4 e
Test Firing – Shooting and Test Firing	9.2.4
Testing of cartridges sold at Championships	9.4.3.2.b
Ties (without Finals) – 4th Place and below	9.15.2.4
Ties (without Finals) – For the first three Places	9.15.2.3
Ties (without Finals) – Ties with Perfect Scores	9.15.2.2
Ties and Shoot-offs	9.15
Ties before the Finals	9.15.1.1
Ties in Competitions with Finals	9.15.1
Ties in Competitions without Finals	9.15.2
Ties in the Finals (Rule 9.18.3.4)	9.15.4.3
Training	9.6.2
Training – Pre-Event (Official)	9.6.2.1
Training – Unofficial	9.6.2.2
Trap – “Lost” Targets	9.8.8.4
Trap – “No Target”	9.8.8
Trap – “No Target” – Responsibility of the Referee	9.8.8.1 a
Trap – “No Target” even if Athlete has fired	9.8.8.2
Trap – “No Target” if Athlete has not fired	9.8.8.3
Trap – Competition Rules	9.8
Trap – Conduct of a Round	9.8.1
Trap – Drawings and Tables	9.20
Trap – Horizontal Angles	9.20.1
Trap – Interruption – View of Targets	9.8.4
Trap – Irregular Trajectory	9.8.6.2

EDITION 2017 | Second Print 01/2018
Copyright: ISSF

Trap – Jury Checks	9.8.6
Trap – Method	9.8 2
Trap – Mixed Team Event	9.19
Trap – Preferred Special Settings for the Trap Event	9.8.5.2
Trap – Preferred Special Settings not used	9.8.5.2
Trap – Preparation Time Limit, additional Time to leave Station 5	9.8.3
Trap – Refused Target	9.8.7
Trap – Refused Target – Procedure by the Athlete	9.8.7
Trap – Setting Table	9.20.3
Trap – Target Distances, Angles and Elevations	9.8.5
Trap – Target Limits	9.8.5.3
Trap – Trap Setting Procedure	9.8.5.4
Trap – Trial Targets	9.8.6.1
Trap – Using only one Range Setting	9.8.5.2 d
Trap and Double Trap Pit (Rule 6.4.18.5)	9.1.5
Trap Horizontal Angels	9.20.1
Trap Ranges (Rule 6.4.18.4)	9.1.5
Trap Setting Tables (I - IX)	9.20.3
Types of Shotguns	9.4.2.1
Uncompleted Round – Deduction of remaining Points	9.16.4.2
Unofficial Training – No Advantage	9.6.2.2
Verbal Protests	9.17.2
Visible Scoreboard Errors	9.14.3.3
Warning (Yellow Card)	9.16.3 /9.16.3.2 / 9.16.3.6
Warning issued by the Referee	9.5.5.3
Women's Events/Men’s Events	9.1.4
Written Protests	9.17.3

Copyright: ISSF

International Shooting Sport Federation
Internationaler Schiess-Sportverband e.V.
Fédération Internationale de Tir Sportif
Federación Internacional de Tiro Deportivo

10. RUNNING TARGET RULES

FOR
10m Running Target
10m Running Target Mixed
50m Running Target
50m Running Target Mixed

EDITION 2017 | Second Print 01/2018
Copyright: ISSF

Chapters

10.1 GENERAL *548*

10.2 SAFETY *548*

10.3 RANGE AND TARGET STANDARDS *548*

10.4 STANDARDS FOR 50m AND 10m RIFLES *548*

10.5 CLOTHING REGULATIONS *550*

10.6 COMPETITION OFFICIALS *552*

10.7 SHOOTING EVENT PROCEDURES and COMPETITION RULES *555*

10.8 MEDAL MATCH RULES *560*

10.9 INFRINGEMENTS AND DISCIPLINARY RULES *561*

10.10 MALFUNCTIONS *562*

10.11 FAILURE OF 10m EST SYSTEMS *564*

10.12 TIE-BREAKING *564*

10.13 RUNNING TARGET SPECIFICATION TABLE *567*

10.14 DRAWINGS *567*

10.15 INDEX *568*

NOTE:

Where figures and tables contain specific information, these have the same authority as the numbered rules.

Copyright: ISSF

10.1 GENERAL

10.1.1 These Rules are part of the ISSF Technical Rules and apply to all 10m and 50m Running Target events.

10.1.2 All athletes, team leaders and officials must be familiar with the ISSF Rules and ensure that these Rules are enforced. It is the responsibility of each athlete to comply with the Rules.

10.1.3 When a Rule refers to right-handed athletes, the reverse of that Rule refers to left-handed athletes.

10.1.4 Unless a Rule applies specifically to a men's or women's event, it must apply uniformly to both men's and women's events.

10.2 SAFETY

SAFETY IS OF PARAMOUNT IMPORTANCE

ISSF Safety Rules are found in Rule 6.2.

10.3 RANGE AND TARGET STANDARDS

Target and target standards are found in Rule 6.3. Requirements for ranges and other facilities are found in Rule 6.4.

10.4 STANDARDS FOR 50M AND 10M RIFLES

See **RUNNING TARGET RIFLE SPECIFICATION TABLE** (10.13)

Any rifle that meets the following standards may be used:

10.4.1 The weight of the rifle and sight together must not exceed 5.5 kg.

10.4.2 An adjustable butt-plate is permitted. The curvature of the butt-plate (positive or negative) must not exceed a depth or height of 20 mm. The butt-plate length must not exceed 150mm. Measurement of the depth or height of the butt-plate will be made at right-angles to the center-line of the bore of the rifle (see Table). The lowest point of the butt-plate, in its lowest position must not be lower than 200 mm below the center-line of the bore of the rifle (see Table).

10.4.3 Sights

The height of the center-line of the telescope above the center-line of the bore must not be more than 75 mm.

EDITION 2017 | Second Print 01/2018
Copyright: ISSF

10.4.3.1 **50m Rifles.** Any types of sights are permitted.

10.4.3.2 **10m Rifles.** Any type of sights is permitted except that optical sights must be non-variable with a maximum of four power (4X) magnification (tolerance = +0.4 x). Examination of magnification power will be done with mechanical or optical devices.

10.4.3.3 Except when a sight is damaged, through mechanical or optical failure, it may not be exchanged between slow and fast runs. Sight adjustments during the event are permitted, provided they do not delay the shooting.

10.4.3.4 **Barrel Weights**. Only barrel weights within a radius of 60 mm from the center of the barrel are permitted.

10.4.3.5 **One Rifle Per Event**. The same rifle, including the sight, weights and trigger system, must be used for slow and fast runs in any event.

10.4.3.6 **Specific Standards for 50m Rifles**

a) The trigger pull weight must be not less than 500 grams;

b) The weight of the trigger pull must be measured with the barrel held vertically;

c) The length of the system measured from the rear of the closed bolt in the discharged position to the foremost end of the system, including any extension (whether part of the barrel or not), must not exceed 1000 mm; and

d) Only caliber 5.6 mm (.22“) Long Rifle ammunition is permitted.

10.4.4 **Specific Standards for 10m Rifles**

a) The trigger pull weight is unlimited;

b) A set trigger must not be used;

c) The length of the system measured from the rear of the mechanism to the forward end of the system, including any extension (whether part of the barrel or not), must not exceed 1000 mm; and

d) Pellets of any shape, made of lead or other soft material, with a caliber of 4.5 mm (.177”) are permitted.

10.4.5 Pre- and Post-Competition Equipment Checks

10.4.5.1 Athletes are responsible for ensuring that all items of equipment used by them comply with these Rules. The Equipment Control Section must be open to inspect athletes’ equipment from the Official Training day until the last day of Running Target competition. Athletes are encouraged, if they wish, to bring their equipment for an Equipment Control check before the competitions to be sure they comply with these Rules.

Copyright: ISSF

10.4.5.2 Random post-competition checks will be made of all equipment items to ensure compliance (6.7.9).

10.5 CLOTHING REGULATIONS

10.5.1 Marker Tape

10.5.1.1 The ISSF Official Marker Tape must be worn to allow the Range Officer or Jury Member to see the position of the rifle stock.

a) The Marker Tape must be as available from the ISSF;

b) The Marker Tape must be 250 mm long, 30 mm wide and of yellow color with a black border and bearing the ISSF logo; and

c) It must be permanently affixed on the right side of the outer garment.

EDITION 2017 | Second Print 01/2018
Copyright: ISSF

10.5.1.2 The correct position of the Marker Tape must be checked as follows:

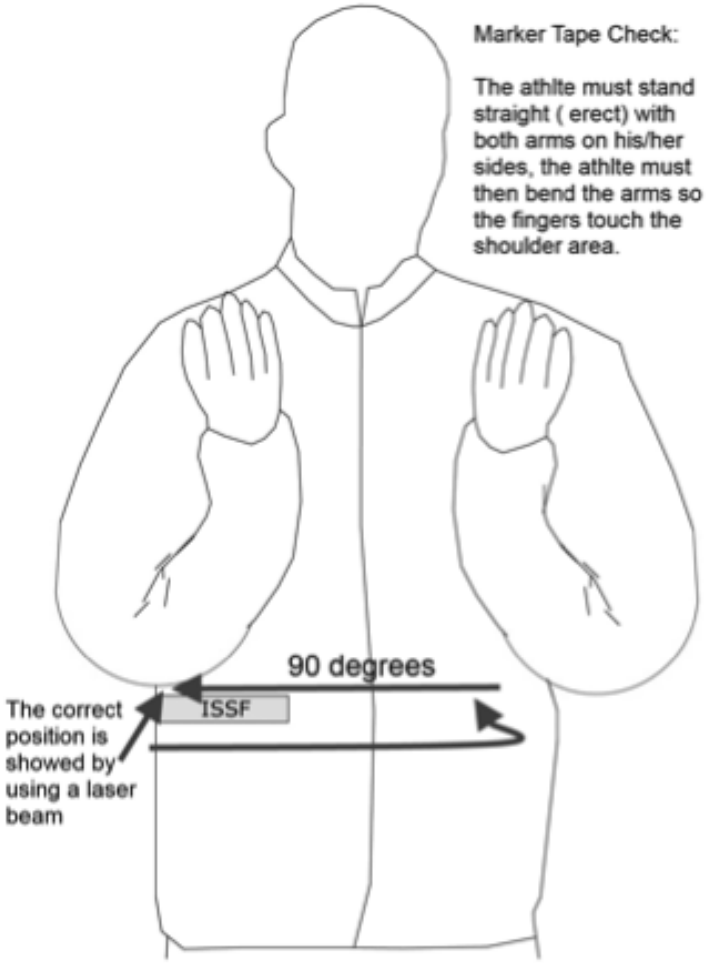

a) Any pockets of the outer garment must be empty;

b) The trigger arm, touching the body, must then be bent into the fully closed upward angled position with no upward lift of the shoulders;

c) The Marker Tape must be permanently affixed, horizontally, below the tip of the elbow (see Drawing); and

d) The Marker Tape may be checked by Equipment Control prior to the competition and marked with a seal or stamp (see drawing).

Copyright: ISSF

10.6 COMPETITION OFFICIALS

10.6.1 Duties and Functions of the Chief Range Officer

A Chief Range Officer must be appointed for each event on a specific range. The Chief Range Officer is:

a) In charge of all Range Officers and range personnel and is responsible for the correct conduct of the shooting event and, where centralized control is exercised, responsible for giving all range commands;

b) Responsible for assuring the co-operation of all range personnel with the Jury;

c) Responsible for resolving any irregularities which other Range Officers cannot resolve;

d) Responsible for the rapid correction of any equipment failures and for making available the necessary experts and material to operate the range. A repair service expert must be at the Chief Range Officer‘s immediate disposal at all times. For cases that exceed the capabilities of the repair service, additional provisions must be made;

e) Responsible for the efficient and rapid scoring of all targets in co-operation with the Chief RTS (Results, Timing and Scoring; formerly Classification) Officer; and

f) If necessary, the Chief Range Officer participates in the drawing of lots for the assignment of firing points.

10.6.2 Duties and Functions of the Assistant Chief Range Officer

If the competition is being shot on several ranges, an Assistant Chief Range Officer should be appointed. He also substitutes for the Chief Range Officer during his absence.

EDITION 2017 | Second Print 01/2018
Copyright: ISSF

10.6.3 Duties and Functions of the Range Officer

Range Officers are responsible to the Chief Range Officer for the orderly operation of a particular range. They work closely with the Jury. The Range Officer:

a) Calls the athletes and announces the preliminary result of the series;

b) Checks the names and bib numbers of athletes to ensure that they correspond with the start list, Range Register and small scoreboards. If possible this must be completed before the start of the Preparation Time;

c) Gives the necessary competition commands;

d) Continually watches the **READY** and shooting positions;

e) Is responsible for the coordinated work of the Register Keeper (when using paper targets) and other range officials;

f) Supervises the correct operation of the targets;

g) Receives protests and passes them on to a Jury Member; and

h) Records all disturbances, disciplinary actions, malfunctions, additional sighting shots, repeats, etc. on the Register Keeper‘s score card.

10.6.4 Duties and Functions of the Register Keeper – Paper Targets

a) Examines the entries on the range assignment list and score cards to ensure that the names of the athletes, bib numbers, range numbers and nations agree;

b) Writes down the indicated score and compares this with the TV monitor when it is in use; and

c) Make entries on score cards in such a way that the RTS Office can identify right and left runs.

10.6.5 Duties and Functions of the Line Officer

a) The Line Officer must be located so he can observe the readiness of the athlete and is able to hear the athlete‘s **“READY”** command;

b) He must be able to observe the score keeping system after each shot, see the result of scoring, and at the same time observe the signal to start the target;

c) He operates the starting button, the stop button, and the switch to change from slow to fast runs; and

d) If no electronic program switch is provided for the mixed runs event, the necessary switching must be executed under a plan approved by the Jury.

Copyright: ISSF

10.6.6 Duties and Functions of the Pit Officer – Paper Targets

A Pit Officer and an assistant must be stationed at each side of all ranges used during the competition. Depending on the system used, target changing can be done with one pit officer and an assistant if adequate safety baffles are available. The pit officer or his assistant is responsible for changing the target during the standard rhythm time. The pit officer is responsible for:

a) Ensuring that the correct targets are attached to the frame in the specified sequence;

b) Correctly positioning 50m half targets or repair centers, correctly applying patches to cover bullet holes, establishing the rhythm of score indicating, etc.;

c) Examining the target after each run and ensuring that every shot is correctly signaled for both value and location;

d) Ensuring that the target is facing in the correct direction before each run;

e) Giving bullet holes close to a scoring ring the lower value when indicating the score;

f) Removing targets from the frame at the conclusion of each stage and place them in a secure container to await transfer to the RTS Office;

g) Target couriers must transmit targets and report sheets to the RTS Office at least after every second athlete finishes firing;

h) Covering sighting shots on 50m targets with black patches;

i) Each series begins with four 4 sighting shots. If the athlete does not shoot the sighting shots, black patches must be stuck on the corresponding targets outside the rings; and

j) Competition shot holes on 50m targets must be covered with transparent patches. Only the outer part of shot holes which are close to a scoring ring should be covered to assist the RTS Office in scoring. The last hit on each target must remain uncovered.

10.6.7 Specific Rules For 10m Events

Depending on the system used, target changing can be done with one Pit Range Officer and an assistant if adequate safety baffles are available. The Pit Range Officer or his assistant is responsible for changing the target during the standard rhythm time.

EDITION 2017 | Second Print 01/2018
Copyright: ISSF

10.6.8 Technical Officers – Electronic Scoring Targets (EST)

Technical Officers may be appointed by the Official Results Provider to operate and maintain EST systems. They may offer advice to Range Officers and Jury Members, but must not make any decisions regarding the application of these rules.

10.7 SHOOTING EVENT PROCEDURES AND COMPETITION RULES

10.7.1 Positions

10.7.1.1 Until the moment that any part of the target becomes visible in the opening, the athlete must remain in the READY position, holding the rifle with both hands in such a way that the lower tip (toe) of the butt-plate is equal to or below the mark on the shooting jacket. The mark must be visible to a Jury Member or Range Officer while the athlete is in the READY position.

10.7.1.2 The **Shooting Position** is standing without support. The rifle butt-plate must be held against the shoulder (upper right chest) and supported only with both hands. The left arm (right arm for left handed athlete) must not rest on the hip or the chest. The athlete must take a position in relation to the bench, table, or wall in such a way that it is clearly visible that they do not give him any support whatsoever. The use of a sling is not permitted.

10.7.1.3 The **Run** is the time when the target is visible in the opening. The timing of the run must start when the leading edge of the target appears and stop when the leading edge of the target reaches the opposite wall.

10.7.2 50m and 10m Events – Programs

10.7.2.1 50m and 10m 30 + 30 shots (Men and Men Junior):

a) 4 sighting shots and 30 shots slow runs, each in 5.0 seconds (+0.2 seconds); and

b) 4 sighting shots and 30 shots fast runs, each in 2.5 seconds (+0.1 seconds).

10.7.2.2 10m 30 + 30 shots (Women and Women Junior):

a) 4 sighting shots and 30 shots slow runs, each in 5.0 seconds (+0.2 seconds); and

b) 4 sighting shots and 30 shots fast runs, each in 2.5 seconds (+0.1 seconds).

Copyright: ISSF

10.7.2.3 50m and 10m 40 shots Mixed Runs (Men and Men Junior):

a) The event will be fired in two (2) series of four (4) sighting shots (one (1) slow and one (1) fast run from each side) and 20 mixed runs; and

b) Each mixed run event must have 10 slow and 10 fast runs from each side, arranged in such a way that the athlete must fire an equal number of runs of each speed from each side. The runs must be mixed in such a manner that it is unlikely the athlete can anticipate whether the next run is slow or fast. There must not be more than five (5) continuous (combined right and left) runs at the same speed.

10.7.2.4 10m 40 shots Mixed Runs (Women and Women Junior).

All events can be conducted in either one (1) or two (2) days, depending on the number of entries in the competition. If an event is conducted in two (2) days, one (1) complete series must be conducted each day.

10.7.3 Competition Rules

10.7.3.1 Every athlete must shoot the entire competition on the assigned range.

a) Any change in range assignments may be made only if the Jury decides that there are different range conditions such as light conditions;

b) If the event is conducted in one (1) day, the order of shooting for the second stage must remain the same as the order of shooting for the first stage; and

c) If the event is conducted over two (2) days the athlete in the lowest ranking position at the end of the first day shoots first on the second day, and the athlete in the highest ranking position at the end of the first day shoots last on the second day.

10.7.3.2 Before the start of the competition, the first athlete must be given the opportunity to dry fire a full series in the event being shot. If the first athlete does not wish to **dry fire** a full series, it is still necessary to run a full series.

10.7.3.3 At ISSF Championships, the Organizing Committee must open the day‘s competition by having a test athlete (someone not in the competition) shoot a full series commencing at the official start time, so that the first athlete may complete the dry firing series under competition conditions.

10.7.3.4 Only the next athlete in succession may dry fire, at a specially marked point on the firing line (see Rule 6.4.15).

10.7.3.5 The competition series always starts with a run from the right to left. Only one shot may be fired on each run.

EDITION 2017 | Second Print 01/2018
Copyright: ISSF

10.7.3.6 **Indication of Shots**

a) Different methods for indicating the score and location of hits may be used. The method used must allow the athlete to be certain of the score and location of the shot;

b) Television or similar monitoring devices that indicate scores and hit locations are permitted for any competition and are compulsory in ISSF Championships;

c) The athlete is not required to use the television monitor. If he does not use it, he must accept the alternative method of indicating scores and hit locations; and

d) If an athlete observes a discrepancy between the monitor and the alternative method of indicating scores and hit locations, he may request the signal to be repeated, but he is not entitled to another shot even if the first signal was in error. If a repeat signal is requested, this must be before shooting again.

10.7.3.7 Preparation Time

After the athlete is called to the shooting station, he must be given a preparation time of two (2) minutes before the first **"READY"** is to be given.

Copyright: ISSF

10.7.4 Firing Procedures

a) When the athlete has finished his preparation on the range, he must call **"READY"** before each sighting shot and also before the first shot of the series;

b) The Range Officer must start the target immediately. If the target does not appear in four (4) seconds after the order to start is given or after completion of the indication of the score, the Range Officer must stop the shooting and make sure that the range equipment and the athlete are ready, after which he will start the target again;

c) If the target is started before the athlete has called **"READY,"** he should refrain from shooting. However, if he shoots, the result must be scored;

d) If the Range Officer finds that the athlete delays unnecessarily before calling **"READY"** or taking the READY position, the following action will be taken. In the case of the first occurrence he will be given a **Warning (Yellow Card)** for delay of competition. On the second occurrence a two (2) point **Deduction (Green Card)** will be given. Any subsequent violation could result in **Disqualification (Red Card)** by the Jury;

e) After completing the sighting runs, the athlete may pause for up to 60 seconds to adjust his sight. The MATCH series will then be started;

f) After each run, the score and location of each shot hole must be shown for at least 4 seconds. The end of the indication of the score is always the signal to the athlete for the continuation of the series;

g) It is necessary to set a constant rhythm (time cycle) and system in the time taken to indicate the score, the method to indicate the score and the method to change targets;

h) In 50m MATCH firing, following the completion of a run, the marking and signaling must be completed and the target available to run in not more than 12 seconds, and the athlete must be ready for the target to be released in not more than 18 seconds;

i) In 10m MATCH firing, following the completion of a run, the signaling and target changing must be completed and the target available to run in not more than 18 seconds, and the athlete must be ready for the target to be released in not more than 20 seconds;

j) The Range Officer and the Jury Members must control carefully the 18 and 20 second timings and immediately penalize an athlete who does not comply with this rule;

EDITION 2017 | Second Print 01/2018
Copyright: ISSF

k) When the athlete shoots and the shot is not on the target and he later claims that he was not ready when the target started it will be recorded as a miss and he will not be permitted to re-shoot;

l) The timing for the 18 second (50m) and 20 second (10m) time limits begins when the target disappears at the end of each run. The timing stops when the athlete is in the ready position;

m) The Jury must verify the correct timing of the targets during the competition; and

n) If the target is started from the wrong side or tail first, the run must be cancelled and repeated, even if the athlete has fired.

10.7.4.1 In case anything should occur that might be dangerous, disturb the athlete, or otherwise interfere with the competition, the Range Officer must stop the shooting with the command **"STOP."** Should the athlete fire at the moment of the command, he is entitled to have the run cancelled if he requests it.

10.7.4.2 If a series is interrupted for more than 5 minutes or the athlete is moved to another firing point, he may ask for 2 additional sighting shots (4 sighting shots in the mixed runs event). In such a case the Range Officer must announce **"SIGHTING SHOTS"** and the score keepers must be informed. These sighting shots must begin from the same side from which the series is to be continued after the interruption. If no sighting shots are requested, the series resumes where it was interrupted.

10.7.4.3 If an athlete should be unable to fire during a run, a miss must be scored, unless the Rules that entitle the athlete to a re-shoot apply.

10.7.4.4 If the Range Officer neglects to stop the shooting when the respective Rules apply, the athlete may raise his arm and call **"STOP"** provided he has not caused the situation himself. The Range Officer must stop the shooting at once. If the Range Officer finds the action of the athlete justified, he may continue shooting after a check of the situation according to Rules respectively. If the athlete is not justified, the Range Officer must give the command to repeat the run and the athlete must be penalized by deducting two (2) points from the value of that shot.

Copyright: ISSF

10.7.4.5 **Misses**

a) Every shot prior to the appearance of the competition target must be scored as a miss;

b) The target will be started without a repeated shot and the miss marked as “Z” on the target, on the score card and on an incident report;

c) Hits **outside the scoring rings** must be scored as zero(es) and recorded as “X” on the target;

d) If the athlete **does not shoot**, the run is scored as zero and recorded as “-” on the target;

e) Shots not hitting the target are scored as zero(es) and recorded as “Z” on the target; and

f) Skid shots and ricochets must be scored as zero(es).

10.7.4.6 **Misses and Penalties in 10m Events:**

a) The athlete must not discharge propellant gas from his rifle. For the first such offense, two (2) points will be deducted **(Green Card)** from the score of the next competition shot. For the second offense, the athlete must be disqualified **(Red Card)** from further competition;

b) Any **release of the propelling charge**, after his first competition target is in place, without a hit on the target will be scored as a miss; and

c) It is the responsibility of the athlete to ensure his air or gas rifle is fully charged with propellant air or gas prior to commencing the competition. If during the competition he has insufficient propellant air or gas to continue, he will be allowed a maximum of five (5) minutes to renew the supply. He may then continue the series but without any additional sighting shots.

10.8 MEDAL MATCH RULES

10.8.1 A 10m Running Target Medal Match may be conducted as the second phase in the 10m Running Target Men, Women, Men Junior or Women Junior events.

10.8.2 The full 10m Running Target Men, Women, Men Junior or Women Junior course of fire must be completed as a Qualification for a Medal Match.

10.8.3 The four (4) highest scoring athletes in the Qualification advance to the Medal Match. Their start position in the Medal Match is determined by their rank in the Qualification.

EDITION 2017 | Second Print 01/2018
Copyright: ISSF

10.8.4 Ties for the second and fourth place in the Qualification will be broken according to shoot-off rules.

10.8.5 All qualifiers for the Medal Match start at zero (0). No Qualification scores carry forward into the Medal Match.

10.8.6 Medal Match qualifiers must report ready to shoot on the range 10 minutes before the start time.

10.8.7 In the Medal Match, the first place athlete in the Qualification will compete against the fourth place athlete; the second place athlete in the Qualification will compete against the third place athlete.

10.8.8 An introduction of the athletes must be made.

10.8.9 The Medal Match will be conducted on either two (2) or four (4) ranges.

10.8.10 If there are only two (2) ranges, the first relay will be held with the athletes ranked first and fourth.

10.8.11 If there are four (4) ranges, the athletes ranked first and fourth are on adjacent ranges and second and third are on the other ranges.

10.8.12 The preparation time is one (1) minute followed by two (2) sighting shots, one left and one right (fast runs). The first sighting shot is on command.

10.8.13 All competition shots are on command in fast runs (2.5 seconds).

10.8.14 Scoring is in decimals. The athlete with the highest score in each match on each run receives one point. If there is a tie between a pair, no athlete receives a point.

10.8.15 The athlete who receives six (6) points or more with a difference of two (2) points is the winner of the match.

10.8.16 The losers of the two (2) semifinal matches will compete for bronze medal in the same way as above

10.8.17 The winners of the semifinal matches will compete for gold or silver medals in the same way as above.

10.9 INFRINGEMENTS AND DISCIPLINARY RULES

10.9.1 The athlete must not exceed the preparation time of two (2) minutes without justification, or wait longer than 60 seconds after the conclusion of sighting shots to begin competition shots. After 30 additional seconds, the target must be started and the result counted whether the athlete is in the shooting position or not.

Copyright: ISSF

10.9.2 If an athlete does not report when he is due to start the competition the Range Officer must call his name out loud three (3) times within one (1) minute. If the athlete fails to appear, he must have a new shooting time set by the competition officials and two (2) points must be deducted from his total score. If, however, the Jury is convinced that the reason the athlete was late was beyond his control, no penalty will be enforced.

10.9.3 An athlete who violates the Rules concerning the READY or shooting position must be given a **Warning (Yellow Card)** after the first violation. On the second occurrence a two (2) point **Deduction (Green Card)** will be given. Any subsequent violation must result in **Disqualification (Red Card)**.

10.10 MALFUNCTIONS

10.10.1 If the athlete has a malfunction with his rifle or ammunition in the Qualification round, the rifle must be placed on the bench or table without further touching it. The Range Officer must be called and shown the malfunction. The Range Officer must interrupt the series of target runs and start a timer to determine the length of the interruption. Malfunctions in Medal Matches may not be claimed.

10.10.2 If the Range Officer determines, after examining the rifle and ammunition, that the malfunction was not caused by the athlete, the run may be repeated.

10.10.3 **The athlete must not be considered at fault if:**

a) The rifle is found in a discharged condition, the chamber is found to contain a cartridge of the same type the athlete is using, the cartridge shows a clear impression of the firing pin and the bullet has not left the barrel; or,

b) The reason for not shooting was caused by a malfunction of the rifle which is not likely to have been caused by the athlete or could not reasonably have been prevented by him.

EDITION 2017 | Second Print 01/2018
Copyright: ISSF

10.10.4 **The athlete must be considered at fault if:**

a) He has not placed the rifle on the bench or table;

b) He changed something on the rifle before placing it on the table;

c) The safety catch was not released;

d) The breech was not closed all the way;

e) The rifle was not loaded; or

f) The rifle was loaded with the wrong kind of ammunition.

If the Range Officer determines that the malfunction was caused by the athlete, a miss must be scored.

10.10.5 After the interruption due to a malfunction of the rifle or ammunition, the Range Officer may order the repair of the rifle or a change of ammunition. If the malfunction can be repaired within five (5) minutes, the shooting may be continued. If the repair will take longer than five (5) minutes, the athlete has the right to continue shooting immediately with another rifle or to withdraw to repair his rifle. The Range Officer, with the consent of the Jury, must then decide when the athlete may continue his series, either with the repaired rifle, or with another rifle if a repair is impossible. The series must be continued from the point of interruption.

10.10.6 The Range Officer should continue as if the athlete did not withdraw in order to allow the next athlete to complete his dry firing.

10.10.7 **Faulty Sights**

a) If the athlete discovers during his sighting shots that a faulty sight cannot be corrected by adjustment, the Jury can agree to a change of the sight, if a second sight is available;

b) After the change the athlete must receive sighting shots;

c) The athlete must not receive a repeat or additional sighting shots if the examination by the Range Officer shows that the sight mount was not properly tightened; and

d) If the sight becomes loose during a competition series because it was not properly tightened, all shots must be scored.

Copyright: ISSF

10.11 FAILURE OF 10M EST SYSTEMS

10.11.1 **If there is a failure of ALL targets on a range** - also applicable to conventional ranges:

a) The actual time must be recorded by the Chief Range Officer and the Jury;

b) All completed MATCH shots fired by each athlete must be counted and recorded. In the event of a range power supply failure, this may involve waiting until power is restored to enable the number of shots registered by the target, not necessarily on the firing point monitor, to be established; and

c) After the failure is rectified and the full range is in operation the athletes will be allowed a one (1) minute preparation time to allow them to resume their positions. The time for recommencing is to be announced over the loudspeaker system at least five (5) minutes beforehand. At the end of the preparation time, the athletes will be allowed four (4) sighting shots (2 left runs; 2 right runs). These sighting shots must begin from the same side from which the series is to be continued after the interruption. After the sighting shots a 30 second pause will be allowed. After the sighting shots and pause the series will resume where it was interrupted.

10.11.2 **In the event of the failure of a Single Target**

If a single target fails to function the athlete will be moved to another target where the same procedure stated in Rule 10.11.1, c will apply.

10.11.3 **Complaint concerning failure to register or display a shot** on the monitor of an electronic scoring target system.

a) The athlete must immediately inform the nearest range official of the failure. The range official must make a written note of the time of the complaint. One or more Jury Members must go to the firing position; and

b) The athlete will be directed to fire one more MATCH shot at his target. The athlete must call **"READY."** The procedure of a complaint concerning a failure to register or display a shot stated in the Technical Rules (6.10.8) will apply.

10.12 TIE-BREAKING

10.12.1 Individual Ties in 50m and 10m Events

Ties for athletes with perfect scores will not be broken.

EDITION 2017 | Second Print 01/2018
Copyright: ISSF

10.12.1.1 **Ties for places 1 – 3 and below:**

a) If two (2) or more athletes shoot equal scores, ties for the first three (3) individual places must be decided by a shoot-off to be arranged by the Jury. This shoot-off consists of two (2) sighting shots (one (1) left – one (1) right) and two (2) competition shots (one (1) left – one (1) right) in 2.5 seconds (fast run) on command for all competition shots; and

b) In the event of a further tied score the shoot-off will continue until the tie is broken.

10.12.1.2 **Rules for Shoot-offs**

a) The shoot-off must begin as soon as possible after the protest time has expired. If the shoot-off is not held at a prearranged time that was publically announced, the athletes involved must remain in contact with the Chief Range Officer pending an announcement as to time and place;

b) Athletes with tied scores will be allocated adjacent firing points by the drawing of lots under the supervision of the Jury. If more athletes have equal scores, the firing sequence will also be determined by the drawing of lots. When several athletes are tied for more than one ranking place, the tie for the lowest ranking position will be broken first, followed by the next ranking higher position until all ties are broken;

c) If an athlete fails to appear for a shoot-off, he will be ranked last in this shoot-off. If two (2) or more shoot-off athletes fail to appear they will be ranked according to Rule 10.12.1.3 for Individual Ties ranking from 4th place; and

d) During the shoot-off, malfunctions and other irregularities must be treated according to these Rules, but only one (1) malfunction is allowed during the breaking of the tie and any re-shoot or completion will take place immediately.

Copyright: ISSF

10.12.1.3 Ties for 4th place and lower, if not resolved by any Shoot-off, must be decided as follows:

a) **10m Events.** Any remaining ties for fourth (4th) place and lower are ranked according to tie-breaking Rule 6.15 (i.e., highest number of inner tens, highest score on the last series, next to the last series, etc.);

b) **For 50m Running Target 30 + 30.** Any remaining ties for fourth (4th) place and lower are ranked according to the highest total of the fast run; and if ties remain by comparing the lowest value shot(s) in the total competition for the tied individuals (the athlete with the lowest value shot(s) is declared the loser); if any ties remain, the athletes must have the same ranking; and

c) **For 50m Running Target Mixed Runs.** Any remaining ties for fourth (4th) place and lower are ranked according to the highest total of the second stage; and if ties remain by comparing the lowest value shot(s) in the total competition for the tied individuals (the athlete with the lowest value shot(s) is declared the loser); if any ties remain, the athletes must have the same ranking.

10.12.2 Team Ties

Team Ties in 10m Events / 50m Events

Ties in team events must be decided by totaling the results of all members of a team and applying these Tie-Breaking steps.

a) The highest total number of inner tens;

b) The highest total score on the last series, then the next to the last series etc.; and

c) If any ties remain, total scores will be compared on shot-by-shot basis using inner tens, beginning with the last shot, then the next to the last shot etc.

EDITION 2017 | Second Print 01/2018
Copyright: ISSF

10.13 RUNNING TARGET SPECIFICATION TABLE

Event	Max. weight	Trigger pull	Butt plate	Sights	Barrel weights	Ammu-ni-tion	MATCH shots
10m Run-ning Target	5.5 kg including telescope	Free, No set trigger	Depth: lowest point 200 mm Length: max. 150 mm Depth/ height of curve maximum 20 mm	Any sights, teles-cope with non-varia-ble maxi-mum four power (tolerance + 0.4 x) magni-fica-tion	Within a radius of 60 mm	4.5 mm (.177")	30 slow runs 30 fast runs
10m Run-ning Target Mixed							40 mixed runs
50m Run-ning Target	5.5 kg including telescope	500 g, No set trigger		Any sights Length: No res-tric-tions	Within a radius of 60 mm	5.6 mm (.22"lr)	30 slow runs 30 fast runs
50m Run-ning Target Mixed							40 shots mixed runs

10.14 DRAWINGS

10m Rifle:	The length of the system/ barrel including any extension must not be more than 1000 mm.
50m Rifle:	The length of the system measured from the rear of the closed bolt in the discharged position to the foremost end of the system, including any extension, must not exceed 1000 mm.

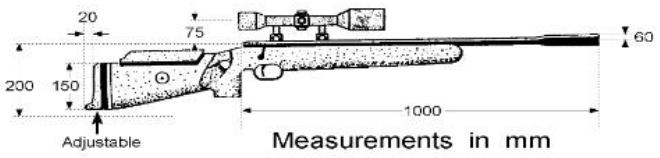

Copyright: ISSF

10.15 INDEX

10m – Changing of Targets	10.6.7
10m Rifle – Pellet specification	10.4.4 d
10m Rifle – Length of the System	10.4.4 c
10m Rifle – Standards	10.4.4
10m Rifle – Trigger Pull	10.4.4 a
50m and 10m Events – Programs	10.7.2
50m Rifle – Ammunition	10.4.3.6 d
50m Rifle – Length of the System	10.4.3.6 c
50m Rifle – Standards	10.4.3.6
50m Rifle – Trigger Pull	10.4.3.6 a
Adjusting the Sight – Maximum 60 Seconds	10.7.4 e
Appearance of the Target – Within 4 Seconds	10.7.4 b
Application of Rules 10m and 50m	10.1.1
Assistant Chief Range Officer – Duties and Functions	10.6.2
Barrel Weights	10.4.3.4
Butt Plate	10.4.2
Cancel and repeat a Run	10.7.4.1
Change of a Sight during the Sighting Series	10.10.7 a
Change of Ammunition	10.10.5
Chief Range Officer – Duties and Functions	10.6.1
Claim not Ready – After Shooting	10.7.4 c / 10.7.4 k
Clothing Regulations	10.5
Competition Officials	10.6
Competition Rules	10.7.3
Complaint concerning Failure to register or display a Shot (EST)	10.11.3
Complete Dry Firing for the next Athlete	10.10.6
Completion of a Run – 10m; 18 Seconds / 20 Seconds	10.7.4 i
Completion of a Run – 50m; 12 Seconds / 18 Seconds	10.7.4 h
Continue a Competition after Malfunction	10.10.5
Damaged Sights – Exchange of a Sight	10.4.3.3
Deduction of Points – Not justified Request	10.7.4.4
Deduction of Points – Not reporting at the appointed Time	10.9.2
Deduction of Points / Disqualification – Discharging Propellant Gas	10.7.4.6
Delaying calling ‘Ready’ Unnecessarily - Penalties	10.7.4 d
Discharging Propellant Gas during the 10m Competition	10.7.4.6 b

EDITION 2017 | Second Print 01/2018
Copyright: ISSF

Disturbance of the Athlete	10.7.4.1
Drawings – 10m and 50m Rifles	10.14
Dry Fire – Before the Competition	10.7.3.2
Dry Firing – A full Series	10.7.3.2
Dry Firing – Sequence of Athletes	10.7.3.4
Events conducted in one / two Day(s)	10.7.2.4
Exceeding of Preparation Time	10.9.1
Exchange of Rifle, Sight, Weight, Trigger	10.4.3.5
Exchange of the Rifle Sight	10.4.3.3
Extra Shot – Directed to Fire	10.11.3 b
Failure of 10m Electronic Scoring Target Systems (EST)	10.11
Failure of a Single Target	10.11.2
Failure of all Targets on a Range	10.11.1
Fault of an Athlete - Malfunction	10.10.4
Faulty Sights	10.10.7
Firing Procedures	10.7.4
General Rules	10.1
General Standards for 50m and 10m Rifles	10.4
General Standards for 50m and 10m Rifles – Table	10.13
Hits outside the Scoring Rings – Recording / Scoring	10.7.4.5
Indication of Shots – Monitors etc.	10.7.3.6
Individual Tie – Perfect Score	10.12.1
Individual Ties for the first 3 Places	10.12.1.1
Inform the Range Officer of the Failure to register or display a Shot	10.11.3 a
Infringements and Disciplinary Rules	10.9
Insufficient Air or Gas	10.7.3.14 c
Interruption of Series more than 5 Minutes – Additional Sighting	10.7.3.10
Knowledge of the Rules	10.1.2
Left-handed Athlete / Right-handed Athlete	10.1.3
Line Officer – Duties and Functions	10.6.5
Loose Sight	10.10.7 d
Malfunction – Caused by the Athlete	10.10.4
Malfunction – Not caused by the Athlete	10.10.3 b
Malfunction – Athlete not considered at fault	10.10.3
Malfunctions	10.10
Marker Tape	10.5.1
Medal Match Rules	10.8
Men's Events / Women’s Events	10.1.4

Copyright: ISSF

Misses	10.7.4.5
Misses and Penalties in 10m Events	10.7.4.6
Mixed Runs – 20 / 20	10.7.2.3
Not fired Shots – Recording / Scoring	10.7.4.5 d
Not fired Shots – Unable to fire	10.7.3.11
Not fully charged Air or Gas Rifle	10.7.4.6 c
Not hitting the Target – Recording / Scoring	10.7.4.5 e
Not properly tightened Sight	10.10.7 d
Not reporting at the appointed Time – Late Athlete	10.9.2
Number of Shots per Run	10.7.3.5
One Rifle per Event	10.4.3.5
Pit Officer – Duties and Functions	10.6.6
Pre and Post Competition Equipment Checks	10.4.5
Preparation Time – 2 Minutes	10.7.3.7
Range and Target Standards	10.3
Range Officer – Duties and Functions	10.6.3
READY before Sighting Shots	10.7.4 a
READY before the first Competition Shot	10.7.4 a
Ready Position	10.7.1.1
Ready Position – Incorrect Position	10.7.1.2
Refusing of a Target – Appearance before Ready	10.7.4 c
Register Keeper – Duties and Functions	10.6.4
Release of the Propelling Charge during the 10m Competition	10.7.4.6 b
Repairing a Rifle	10.10.5
Ricochets – Recording / Scoring	10.7.4.5 f
Right-handed Athlete / Left-handed Athlete	10.1.3
Run – Definition	10.7.1.3
Safety	10.2
Scope of Rules	10.1.1
Shooting before Ready	10.7.4 c
Shooting Events Procedures and Competition Rules	10.7
Shooting Position	10.7.1.2 / 10.14
Shooting Position – Incorrect Position	10.7.1.2
Shoot-off Rules	10.12.1.2
Shot Holes 50m – Patching of Competition Shots	10.6.6 j
Shots prior to Appearance of the Target – Recording / Scoring	10.7.4.5 a
Showing of Shot Holes to the Athlete – At least 4 Seconds	10.7.4 f
Sighting Shots 50m – Patching	10.6.6 h

EDITION 2017 | Second Print 01/2018
Copyright: ISSF

Sights	10.4.3
Sights – Faulty Sights	10.10.7
Sights 10m Rifle	10.4.3.2
Sights 50m Rifle	10.4.3.1
Skid Shots – Recording / Scoring	10.7.4.5 f
Slow Runs / Fast Runs – 20 / 20	10.7.2.2
Slow Runs / Fast Runs – 30 / 30	10.7.2.1
Specification Table	10.13
Standards for 10m & 50m Rifles	10.4
Start of a Series – Direction of Runs – From right to left	10.7.3.5
Start of Target from the Wrong Side or Tail first	10.7.4 n
Stop Shooting – On Athlete's Request – Justified	10.7.4.4
Stop Shooting – On Athlete's Request – Not justified	10.7.4.4
Stop Shooting by the Range Officer – Cancel a Run on Request	10.7.4.1
Team Ties	10.12.2
Technical Officers – Electronic Scoring Targets	10.6.8
Technical Problems with a Rifle / Ammunition	10.10.1
Test Athlete	10.7.3.3
Tie-Breaking	10.12
Ties from the 4th Place	10.12.1.3
Ties from the 4th Place – 10m Events	10.12.1.3 a
Ties from the 4th Place – 50m Events 30 / 30	10.12.1.3 b / 10.12.1.3 c
Ties from the 4th Place – 50m Mixed	10.12.1.3 b / 10.12.1.3 c
Time Cycle – Constant Rhythm	10.7.4 g
Time Cycle – Controlled by Range Officials and Jury Members	10.7.4 j
Timing Begins / Ends – 50m: 18 Seconds / 10m: 20 Seconds	10.7.4 l
Verifying of Timing by the Jury during Competition	10.7.4 m
Weight of Rifle	10.4.1 / 10.13
Women's Events / Men’s Events	10.1.4

Copyright: ISSF

LG400
FOR WINNERS

RIO 2016: Silver, Bronze.
World Cup Final Bologna 2016:
Gold, Silver, Bronze.
And much more...

WALTHER

BEST PERFORMANCE

www.carl-walther.com

HOANG
XUAN VINH
GOLD MEDAL
10M

VITALINA
BATSARASHKINA
SILVER MEDAL
10M

FELIPE
ALMEIDA WU
SILVER MEDAL
10M

JIN
JONG-OH
GOLD MEDAL
50M

HOANG
XUAN VINH
SILVER MEDAL
50M

Jin Jong-oh third consecutive 50m pistol gold medal

Hoang Xuan Vinh first Olympic gold medal for Vietnam.